SITE PLAN APPROVAL DRAWINGS

RESIDENTIAL DEVELOPMENT

TAX MAP SECTION 9 | BLOCK 50 | LOT 373
WESTCHESTER COUNTY
1165 GREACEN POINT ROAD
MAMARONECK, NY, 10543

Applicant/Owner:
MR. WILLIAM FEDYNA & ELISABETH FEDYNA
219 W 81ST STREET, APT. 9D
NEW YORK, NY, 10024

Architect:
ARCHI-TECTONICS
111 JOHN ST #700
NEW YORK, NY 10038
(212)206-0920

Attorney:
CUDDY & FEDER LLP
445 HAMILTON AVENUE, 14TH FLOOR
WHITE PLAINS, NY 10601
(914)761-1300

Surveyor:
SPINELLI SURVEYING
650 HALSTEAD AVENUE
MAMARONECK, NY 10543
(914) 381-2357

Site Planner, Civil & Traffic Engineer, Surveyor and Landscape Architect:
120 BEDFORD ROAD
ARMONK, NY 10504
(914) 273-5225

JMC Drawing List:

AREA MAP
SCALE: 1" = 100'

TABLE OF LAND USE

SECTION 9, BLOCK 50, LOT 373
ZONE "R-20" – "ONE FAMILY RESIDENTIAL"
PROPOSED USE: RESIDENTIAL
FIRE DISTRICT: MAMARONECK VILLAGE FD
WATER DISTRICT: WESTCHESTER JOINT WATER WORKS
SCHOOL DISTRICT: MAMARONECK
SEWER DISTRICT: PRIVATE ONSITE WASTEWATER TREATMENT SYSTEM

DESCRIPTION		REQUIRED	EXISTING	PROPOSED
LOT AREA	(FEET)	20,000 MINIMUM	47,560 S.F.	47,560 S.F.
LOT WIDTH	(FEET)	100' MINIMUM	177'	177'
LOT FRONTAGE	(FEET)	100' MINIMUM	177'	177'
LOT DEPTH	(FEET)	100' MINIMUM	280'	280'
BUILDING HEIGHT	(STORIES/FEET)	2.5/35'	1.5/21'±	2.5/35'±
GROSS FLOOR AREA	(SQUARE FEET)	–	–	–
LOT COVERAGE BY PRINCIPAL BUILDING	(PERCENT)	35% MAXIMUM	3.4%	7.7%
OFF STREET PARKING SPACES	(EACH)	2	2	3
YARDS				
FRONT YARD SETBACK	(FEET)	25' MINIMUM	92'	90'
REAR YARD SETBACK	(FEET)	30' MINIMUM	162.9'	147'
SIDE YARD SETBACK	(FEET/TOTAL)	20' MIN/45' TOTAL	33.4'/93.8'	23.4'/56.3'
PARKING				
REAR/SIDE PARKING SETBACK	(FEET)	5' MINIMUM	26.7±	5'
TOTAL PARKING	(SPACES)	2 MINIMUM	1	3

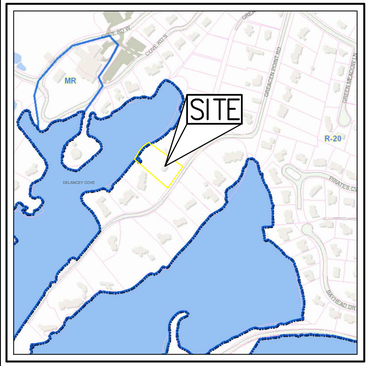

ZONING / VICINITY MAP
SCALE: N.T.S.
SOURCE: WESTCHESTER COUNTY GIS / 2016

LEGEND

	SITE PROPERTY LINE
	ZONING BOUNDARY
MR	MARINE RECREATION
R-20	RESIDENTIAL ZONE

GENERAL CONSTRUCTION NOTES APPLY TO ALL WORK HEREIN:

1. PRIOR TO CONSTRUCTION, THE CONTRACTOR SHALL CALL 811 "DIG SAFELY" (1-800-962-7962) TO HAVE UNDERGROUND UTILITIES LOCATED. EXPLORATORY EXCAVATIONS SHALL COMPLY WITH CODE 753 REQUIREMENTS. NO WORK SHALL COMMENCE UNTIL ALL THE OPERATORS HAVE NOTIFIED THE CONTRACTOR THAT THEIR UTILITIES HAVE BEEN LOCATED. THE CONTRACTOR SHALL BE RESPONSIBLE FOR THE PRESERVATION OF ALL PUBLIC AND PRIVATE UNDERGROUND AND SURFACE UTILITIES AND STRUCTURES AT OR ADJACENT TO THE SITE OF CONSTRUCTION, INSOFAR AS THEY MAY BE ENDANGERED BY THE CONTRACTOR'S OPERATIONS. THIS SHALL HOLD TRUE WHETHER OR NOT THEY ARE SHOWN ON THE CONTRACT DRAWINGS. IF THEY ARE SHOWN ON THE DRAWINGS, THEIR LOCATIONS ARE NOT GUARANTEED EVEN THOUGH THE INFORMATION WAS OBTAINED FROM THE BEST AVAILABLE SOURCES, AND IN ANY EVENT, OTHER UTILITIES ON THESE PLANS MAY BE ENCOUNTERED IN THE FIELD. THE CONTRACTOR SHALL, AT HIS OWN EXPENSE, IMMEDIATELY REPAIR OR REPLACE ANY STRUCTURES OR UTILITIES THAT HE DAMAGES, AND SHALL CONSTANTLY PROCEED WITH CAUTION TO PREVENT UNDUE INTERRUPTION OF UTILITY SERVICE.
2. CONTRACTOR SHALL HAND DIG TEST PITS TO VERIFY THE LOCATION OF ALL EXISTING UNDERGROUND UTILITIES PRIOR TO THE START OF CONSTRUCTION. CONTRACTOR SHALL VERIFY EXISTING UTILITIES DEPTHS AND ADVISE OF ANY CONFLICTS WITH PROPOSED UTILITIES. IF CONFLICTS ARE PRESENT, THE OWNER'S FIELD REPRESENTATIVE, JMC, PLLC AND THE APPLICABLE MUNICIPALITY OR AGENCY SHALL BE NOTIFIED IN WRITING. THE EXISTING/PROPOSED UTILITIES RELOCATION SHALL BE DESIGNED BY JMC, PLLC.
3. CONTRACTOR IS RESPONSIBLE FOR OBTAINING ANY AND ALL LOCAL PERMITS REQUIRED.
4. ALL WORK SHALL BE DONE IN STRICT COMPLIANCE WITH ALL APPLICABLE NATIONAL, STATE, AND LOCAL CODES, STANDARDS, ORDINANCES, RULES, AND REGULATIONS. ALL CONSTRUCTION WORK SHALL BE PERFORMED IN ACCORDANCE WITH ALL SAFETY CODES. APPLICABLE SAFETY CODES MEAN THE LATEST EDITION INCLUDING ANY AND ALL AMENDMENTS, REVISIONS, AND ADDITIONS THERETO, TO THE FEDERAL DEPARTMENT OF LABOR, OCCUPATIONAL SAFETY AND HEALTH ADMINISTRATION'S OCCUPATIONAL SAFETY AND HEALTH STANDARDS (OSHA); AND APPLICABLE SAFETY, HEALTH REGULATIONS AND BUILDING CODES FOR CONSTRUCTION IN THE STATE OF NEW YORK. THE CONTRACTOR SHALL BE RESPONSIBLE FOR GUARDING AND PROTECTING ALL OPEN EXCAVATIONS IN ACCORDANCE WITH THE PROVISION OF SECTION 107-05 (SAFETY AND HEALTH REQUIREMENTS) OF THE NYSDOT STANDARD SPECIFICATIONS. IF THE CONTRACTOR PERFORMS ANY HAZARDOUS CONSTRUCTION PRACTICES, ALL OPERATIONS IN THE AFFECTED AREA SHALL BE DISCONTINUED AND IMMEDIATE ACTION SHALL BE TAKEN TO CORRECT THE SITUATION TO THE SATISFACTION OF THE APPROVAL AUTHORITY HAVING JURISDICTION.
5. CONTRACTOR SHALL MAINTAIN ACCESS TO ALL PROPERTIES AFFECTED BY THE SCOPE OF WORK SHOWN HEREON AT ALL TIMES TO THE SATISFACTION OF THE OWNERS REPRESENTATIVE. RAMPING CONSTRUCTION TO PROVIDE ACCESS MAY BE CONSTRUCTED WITH SUBBASE MATERIAL EXCEPT THAT TEMPORARY ASPHALT CONCRETE SHALL BE PLACED AS DIRECTED BY THE ENGINEER. THE CONTRACTOR SHALL BE RESPONSIBLE FOR PROVIDING SAFE PEDESTRIAN ACCESS AT ALL TIMES.
6. CONTRACTOR SHALL MAINTAIN THE INTEGRITY OF EXISTING PAVEMENT TO REMAIN.

SUBSURFACE UTILITY LOCATIONS ARE BASED ON A COMPILATION OF FIELD EVIDENCE, AVAILABLE RECORD PLANS AND/OR UTILITY MARK-OUTS. THE LOCATION OR COMPLETENESS OF UNDERGROUND INFORMATION CANNOT BE GUARANTEED. VERIFY THE ACTUAL LOCATION OF ALL UTILITIES PRIOR TO EXCAVATION OR CONSTRUCTION.

811 Know what's **below.** **Call** before you dig.

ANY ALTERATION OF PLANS, SPECIFICATIONS, PLATS AND REPORTS BEARING THE SEAL OF A LICENSED PROFESSIONAL ENGINEER OR LICENSED LAND SURVEYOR IS A VIOLATION OF SECTION 7209 OF THE NEW YORK STATE EDUCATION LAW, EXCEPT AS PROVIDED FOR BY SECTION 7209, SUBSECTION 2.

No.	Revision	Date	By
1.	REVISED BUILDING FOOTPRINT	04/11/2019	SPG
2.	UPDATED WETLAND LINES	02/28/2020	RC
3.	UPDATED SURVEY	05/11/2020	RAR
4.	REVISED PER VILLAGE COMMENTS	06/08/2020	RAR
5.	RESUBMIT TO VILLAGE HCZMC	07/01/2020	RAR

Previous Editions Obsolete

JMC Planning, Engineering, Landscape Architecture & Land Surveying, PLLC
JMC Site Development Consultants, LLC
John Meyer Consulting, Inc.
120 BEDFORD ROAD • ARMONK, NY 10504
voice 914.273.5225 • fax 914.273.2102
www.jmcpllc.com

Drawn:	SMN	Approved:	JAR
Scale:	NOT TO SCALE		
Date:	07/24/2018		
Project No:	18100		
18100-SITE	COVER	COVER.scr	
Drawing No:	C-000		

LEGEND

- EXISTING PROPERTY LINE
- ADJACENT PROPERTY LINE
- EXISTING EASEMENT LINE
- EXISTING BUILDING LINE
- EXISTING PAVEMENT EDGE
- EXISTING CONTOUR
- EXISTING INDEX CONTOUR
- EXISTING FENCE
- EXISTING FLAGGED WETLAND LINE
- EXISTING TREE AND DESIGNATION
- 10 FOOT CONTOUR FROM USGS MAPPING (NYSDEC LIMIT OF ADJACENT AREA)
- EXISTING WETLAND SETBACK
- EXISTING SANITARY LINE AND SIZE
- EXISTING WATER LINE
- EXISTING OVERHEAD WIRES
- EXISTING MANHOLE
- EXISTING WATER VALVE
- EXISTING UTILITY POLE
- DP-2 BORING LOCATION AND DESIGNATION

NOTES:

1. EXISTING CONDITIONS DEPICTED ON THIS PLAN HAVE BEEN TAKEN FROM SURVEY PREPARED BY SPINELLI SURVEYING, DATED 02/22/2018, LAST REVISED 04/23/2020.
2. WETLANDS FLAGGED BY ECOLOGICAL SOLUTIONS L.L.C.
3. THE MEAN LOW WATER BOUNDARY IS BEYOND DRAWING LIMITS TOWARD THE DELANCEY COVE CHANNEL.
4. MEAN HIGH WATER: 3.39'
   MEAN HIGHER HIGH WATER: 3.75'
   MEAN LOW WATER: -3.90
   MEAN LOWER LOW WATER: -4.14

APPLICANT/OWNER:
MR. WILLIAM FEDYNA & ELISABETH FEDYNA
219 W 81ST STREET, APT. 9D
NEW YORK, NY, 10024

ARCHITECT:
ARCHI-TECTONICS
111 JOHN ST. #700
NEW YORK, NY 10038

JMC Planning, Engineering, Landscape Architecture & Land Surveying, PLLC
JMC Site Development Consultants, LLC
John Meyer Consulting, Inc.
120 BEDFORD ROAD • ARMONK, NY 10504
voice 914.273.5225 • fax 914.273.2102
www.jmcpllc.com

EXISTING CONDITIONS MAP

RESIDENTIAL DEVELOPMENT
1165 GREACEN POINT ROAD
MAMARONECK, NY, 10543

ANY ALTERATION OF PLANS, SPECIFICATIONS, PLATS AND REPORTS BEARING THE SEAL OF A LICENSED PROFESSIONAL ENGINEER OR LICENSED LAND SURVEYOR IS A VIOLATION OF SECTION 7209 OF THE NEW YORK STATE EDUCATION LAW, EXCEPT AS PROVIDED FOR BY SECTION 7209, SUBSECTION 2.

No.	Revision	Date	By
1.	REVISED BUILDING FOOTPRINT	04/11/2019	SPG
2.	UPDATED WETLAND LINES	02/28/2020	RC
3.	UPDATED SURVEY	05/11/2020	RAR
4.	REVISED PER VILLAGE COMMENTS	06/08/2020	RAR
5.	RESUBMIT TO VILLAGE HCZMC	07/01/2020	RAR
	Previous Editions Obsolete		

Drawn: SMN Approved: JAR
Scale: 1" = 20'
Date: 07/24/2018
Project No: 18100
18100-SITE EXIST EXIST.scr
Drawing No: C-010

NOTES:

1. EXISTING CONDITIONS DEPICTED ON THIS PLAN HAVE BEEN TAKEN FROM SURVEY PREPARED BY SPINELLI SURVEYING, DATED 02/22/2018, LAST REVISED 04/23/2020.
2. THE CONTRACTOR SHALL VERIFY THE LOCATION OF EXISTING UTILITIES TO BE DEMOLISHED AND EXISTING UTILITIES TO BE PROTECTED. IF ANY DISCREPANCIES ARE FOUND, THE CONTRACTOR SHALL NOTIFY THE GENERAL CONTRACTOR AND JMC PRIOR TO THE START OF CONSTRUCTION.
3. PRIOR TO THE START OF ANY DEMOLITION THE CONTRACTOR SHALL OBTAIN ALL NECESSARY PERMITS AND/OR APPROVALS FROM THE VILLAGE OF MAMARONECK AND ALL OTHER AUTHORITIES HAVING JURISDICTION. CONTRACTOR SHALL PAY ALL OUTSTANDING FEES, CHARGES, AND DEPOSITS TO ACQUIRE SAID PERMITS. NO DEMOLITION SHALL COMMENCE UNTIL A PERMIT HAS BEEN OBTAINED FROM THE VILLAGE.
4. THE CONTRACTOR SHALL COORDINATE THE DISCONNECTION OF ALL UTILITIES WITH THE UTILITY COMPANY HAVING JURISDICTION PRIOR TO THE START OF DEMOLITION. CONFIRMATION OF DISCONNECTED UTILITIES SHALL BE PROVIDED TO THE VILLAGE OF MAMARONECK BUILDING DEPARTMENT IN ACCORDANCE WITH THEIR REQUIREMENTS. LETTERS FROM THE APPROPRIATE UTILITIES STATING THAT GAS AND ELECTRIC HAVE BEEN CUT OFF SHALL BE PROVIDED TO THE TOWN.
5. ANY UNSUITABLE MATERIAL FOUND ON-SITE DURING DEMOLITION/CONSTRUCTION, AS DETERMINED BY THE PROJECT'S GEOTECHNICAL ENGINEER, SHALL BE PROPERLY DISPOSED OF OFF-SITE IN A MANNER APPROVED BY ALL AUTHORITIES HAVING JURISDICTION AND REPLACED WITH SUITABLE MATERIAL AS REQUIRED.
6. ANY UNSUITABLE MATERIAL FOUND ON-SITE DURING CONSTRUCTION SHALL BE DISPOSED OF OFF-SITE IN A MANNER APPROVED BY ALL AUTHORITIES HAVING JURISDICTION AND REPLACED WITH SUITABLE MATERIAL AS REQUIRED. ALL REMOVAL AND REPLACEMENT OF UNSUITABLE MATERIAL SHALL BE COMPLETED UNDER THE DIRECT SUPERVISION OF A GEOTECHNICAL ENGINEER.
7. ALL DEMOLITION AND/OR CONSTRUCTION WITHIN THE RIGHT-OF-WAY, INCLUDING STREETS AND SIDEWALKS, SHALL BE PERFORMED IN ACCORDANCE WITH THE TOWN.
8. ALL CONSTRUCTION/DEMOLITION DEBRIS NOT PROPOSED TO BE RECYCLED SHALL BE REMOVED AND LEGALLY DISPOSED OF OFF-SITE IN ACCORDANCE WITH THE REGULATIONS OF ALL LOCAL, STATE AND FEDERAL AGENCIES HAVING JURISDICTION.
9. EXISTING CONCRETE MAY BE STORED ON SITE, AND RECYCLED FOR USE AS COMPACTED FILL. ALL MATERIAL TO BE USED AS FILL SHALL BE APPROVED BY THE PROJECT GEOTECHNICAL ENGINEER.
10. PRIOR TO THE START OF SITE DEMOLITION, EROSION AND SEDIMENT CONTROL DEVICES SHALL BE INSTALLED IN ACCORDANCE WITH THIS PLAN, AS REQUIRED AND/OR DIRECTED BY THE VILLAGE OF MAMARONECK OR JMC.
11. EXISTING DRAINAGE PATTERNS ON SITE SHALL BE MAINTAINED TO THE MAXIMUM EXTENT PRACTICABLE.
12. ALL EXISTING SIDEWALKS, CURBS, PAVEMENT, ETC. TO REMAIN, WHICH ARE DISTURBED OR DAMAGED DUE TO THE NEW CONSTRUCTION, ARE TO BE REPLACED WITH MATERIALS CONSISTENT WITH EXISTING CONDITIONS.
13. THESE PLANS ARE TO BE PROVIDED TO BOTH THE DEMOLITION CONTRACTOR AND THE SITE CONTRACTOR FOR THEIR USE, INFORMATION AND COORDINATION. ANY QUESTIONS OF CONTRACTOR RESPONSIBILITY AND/OR SEPARATION OF WORK SHALL BE DIRECTED TO THE GENERAL CONTRACTOR IN WRITING PRIOR TO ISSUANCE OF BID.
14. THE OWNER SHALL RETAIN A LICENSED AND QUALIFIED PROFESSIONAL, CERTIFIED BY THE TOWN, TO INSPECT FOR THE PRESENCE OF ASBESTOS AND/OR OTHER HAZARDOUS MATERIALS WITHIN DEMOLITION AREAS PRIOR TO THE COMMENCEMENT OF DEMOLITION. IF REMEDIATION IS REQUIRED, THE OWNER SHALL DO SO IN ACCORDANCE WITH THE COUNTY ASBESTOS RULES AND REGULATIONS AND/OR ANY AUTHORITIES HAVING JURISDICTION. THE CONTRACTOR SHALL PROVIDE ALL REQUIRED DOCUMENTATION TO THE TOWN PRIOR TO OBTAINING A DEMOLITION PERMIT.
15. PRIOR TO COMMENCEMENT OF DEMOLITION, THE CONTRACTOR MUST PROVIDE 24-HOUR NOTIFICATION TO THE TOWN.

LEGEND

	EXISTING PROPERTY LINE
	ADJACENT PROPERTY LINE
	EXISTING EASEMENT LINE
	EXISTING BUILDING LINE
	EXISTING PAVEMENT EDGE
	EXISTING CURB LINE
8 / 10	EXISTING CONTOUR
	EXISTING INDEX CONTOUR
X X	EXISTING FENCE
T10 M	EXISTING TREE AND DESIGNATION
T10 M	EXISTING TREE TO BE REMOVED
	EXISTING WETLAND SETBACK
36" RCP	EXISTING STORM DRAIN LINE AND SIZE
8" SAN	EXISTING SANITARY LINE AND SIZE
W W W	EXISTING WATER LINE
OHW OHW	EXISTING OVERHEAD WIRES
	EXISTING MANHOLE
WV	EXISTING WATER VALVE
	EXISTING UTILITY POLE
DP-2	BORING LOCATION AND DESIGNATION
	EXISTING FEATURE TO BE REMOVED

APPLICANT/OWNER:
MR. WILLIAM FEDYNA & ELISABETH FEDYNA
219 W 81ST STREET, APT. 9D
NEW YORK, NY, 10024

ARCHITECT:
ARCHI-TECTONICS
111 JOHN ST. #700
NEW YORK, NY 10038

JMC Planning, Engineering, Landscape Architecture & Land Surveying, PLLC
JMC Site Development Consultants, LLC
John Meyer Consulting, Inc.
120 BEDFORD ROAD • ARMONK, NY 10504
voice 914.273.5225 • fax 914.273.2102
www.jmcpllc.com

DEMOLITION AND TREE REMOVAL PLAN

RESIDENTIAL DEVELOPMENT
1165 GREACEN POINT ROAD
MAMARONECK, NY, 10543

ANY ALTERATION OF PLANS, SPECIFICATIONS, PLATS AND REPORTS BEARING THE SEAL OF A LICENSED PROFESSIONAL ENGINEER OR LICENSED LAND SURVEYOR IS A VIOLATION OF SECTION 7209 OF THE NEW YORK STATE EDUCATION LAW, EXCEPT AS PROVIDED FOR BY SECTION 7209, SUBSECTION 2.

No.	Revision	Date	By
1.	REVISED BUILDING FOOTPRINT	04/11/2019	SPG
2.	UPDATED WETLAND LINES	02/28/2020	RC
3.	UPDATED SURVEY	05/11/2020	RAR
4.	REVISED PER VILLAGE COMMENTS	06/08/2020	RAR
5.	RESUBMIT TO VILLAGE HCZMC	07/01/2020	RAR
	Previous Editions Obsolete		

Drawn: SMN	Approved: JAR
Scale: 1" = 20'	
Date: 07/24/2018	
Project No: 18100	
18100-SITE / DEMO / DEMO.scr	
Drawing No: C-020	

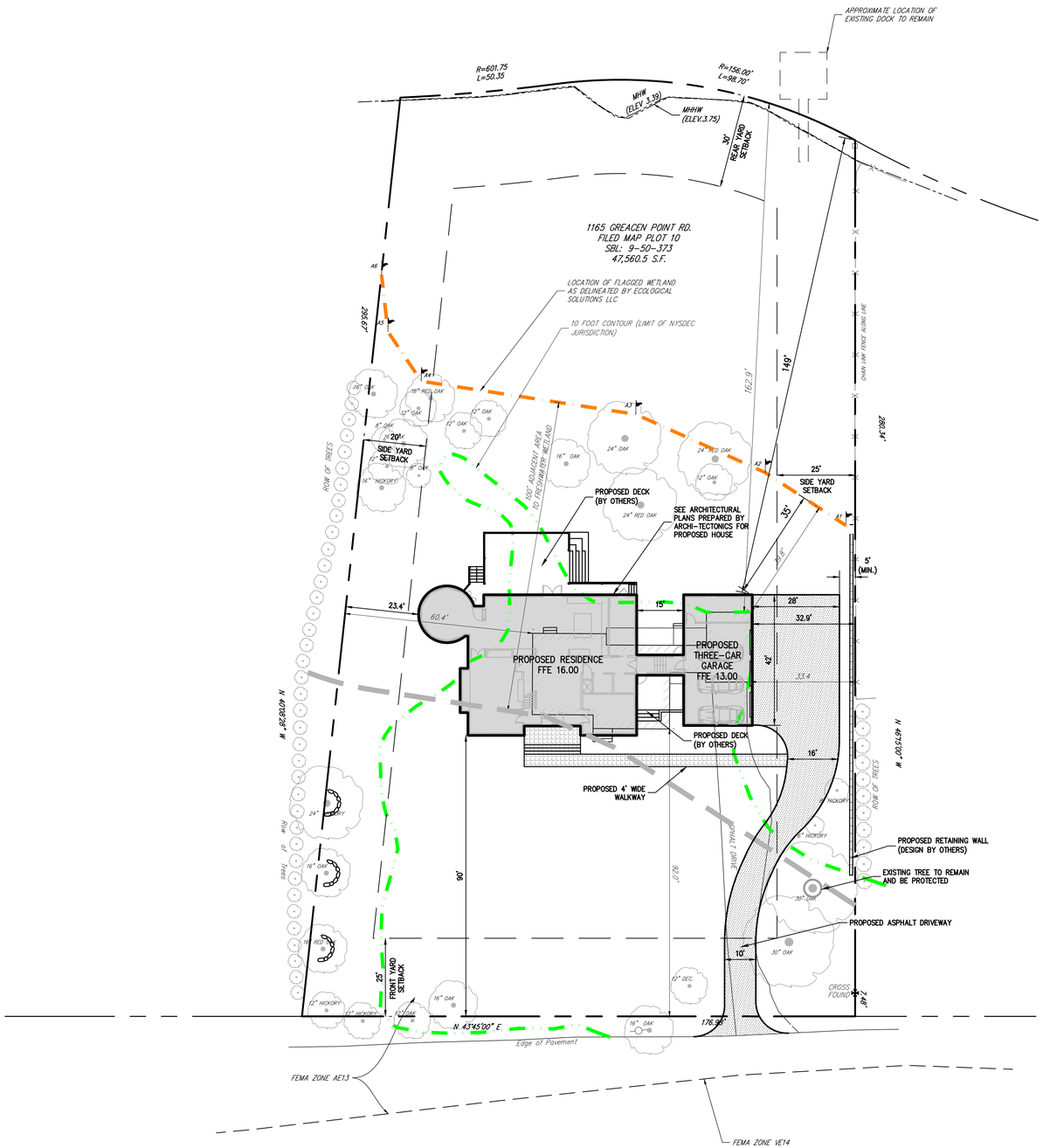

LEGEND

- EXISTING PROPERTY LINE
- ADJACENT PROPERTY LINE
- EXISTING SETBACK LINE
- EXISTING BUILDING LINE
- EXISTING PAVEMENT EDGE
- EXISTING CURB LINE
- EXISTING FENCE
- EXISTING TREE AND DESIGNATION
- EXISTING WATER LINE
- EXISTING UTILITY POLE
- EXISTING WETLAND LIMITS
- EXISTING WETLAND SETBACK
- USGS 10 FOOT CONTOUR (NYSDEC JURISDICTIONAL LINE)
- EXISTING TREE TO REMAIN AND BE PROTECTED
- PROPOSED BUILDING LINE
- PROPOSED SAWCUT LINE
- PROPOSED CONCRETE SIDEWALK
- PROPOSED EDGE OF PAVEMENT
- PROPOSED PAVEMENT HATCH
- PROPOSED RETAINING WALL (DESIGN BY OTHERS)
- PROPOSED FENCE

NOTES:

1. EXISTING CONDITIONS DEPICTED ON THIS PLAN HAVE BEEN TAKEN FROM SURVEY PREPARED BY SPINELLI SURVEYING, DATED 02/22/2018, LAST REVISED 04/23/2020.

LOT COVERAGES

WETLAND BUFFER		EXISTING	PROPOSED
TOTAL WETLAND BUFFER COVERAGE	(S.F./PERCENT)	2,455±/6.6	5,428±/11.4
LOT COVERAGE (PRINCIPAL BUILDING)	(S.F./PERCENT)	1,597±/3.4	3,461±/7.3
LOT COVERAGE (SIDEWALK)	(S.F./PERCENT)	232±/0.05	199±/0.04
LOT COVERAGE (DRIVEWAY)	(S.F./PERCENT)	626±/1.3	1,768±/3.7

OVERALL SITE		EXISTING	PROPOSED
OVERALL LOT COVERAGE	(S.F./PERCENT)	3,149±/6.6	6,480±/13.6
LOT COVERAGE (PRINCIPAL BUILDING)	(S.F./PERCENT)	1,597±/3.4	3,655±/7.7
LOT COVERAGE (SIDEWALK)	(S.F./PERCENT)	234±/0.05	499±/1.0
LOT COVERAGE (DRIVEWAY)	(S.F./PERCENT)	1,318±/2.8	2,326±/4.9

APPLICANT/OWNER:
MR. WILLIAM FEDYNA & ELISABETH FEDYNA
219 W 81ST STREET, APT. 9D
NEW YORK, NY, 10024

ARCHITECT:
ARCHI-TECTONICS
111 JOHN ST. #700
NEW YORK, NY 10038

JMC Planning, Engineering, Landscape Architecture & Land Surveying, PLLC
JMC Site Development Consultants, LLC
John Meyer Consulting, Inc.
120 BEDFORD ROAD • ARMONK, NY 10504
voice 914.273.5225 • fax 914.273.2102
www.jmcpllc.com

LAYOUT PLAN

RESIDENTIAL DEVELOPMENT
1165 GREACEN POINT ROAD
MAMARONECK, NY, 10543

ANY ALTERATION OF PLANS, SPECIFICATIONS, PLATS AND REPORTS BEARING THE SEAL OF A LICENSED PROFESSIONAL ENGINEER OR LICENSED LAND SURVEYOR IS A VIOLATION OF SECTION 7209 OF THE NEW YORK STATE EDUCATION LAW, EXCEPT AS PROVIDED FOR BY SECTION 7209, SUBSECTION 2.

No.	Revision	Date	By
1.	REVISED BUILDING FOOTPRINT	04/11/2019	SPG
2.	UPDATED WETLAND LINES	02/28/2020	RC
3.	UPDATED SURVEY	05/11/2020	RAR
4.	REVISED PER VILLAGE COMMENTS	06/08/2020	RAR
5.	RESUBMIT TO VILLAGE HCZMC	07/01/2020	RAR
	Previous Editions Obsolete		

Drawn:	SMN
Approved:	JAR
Scale:	1" = 20'
Date:	07/24/2018
Project No:	18100
18100-SITE	LAYOUT LAY.scr
Drawing No:	C-100

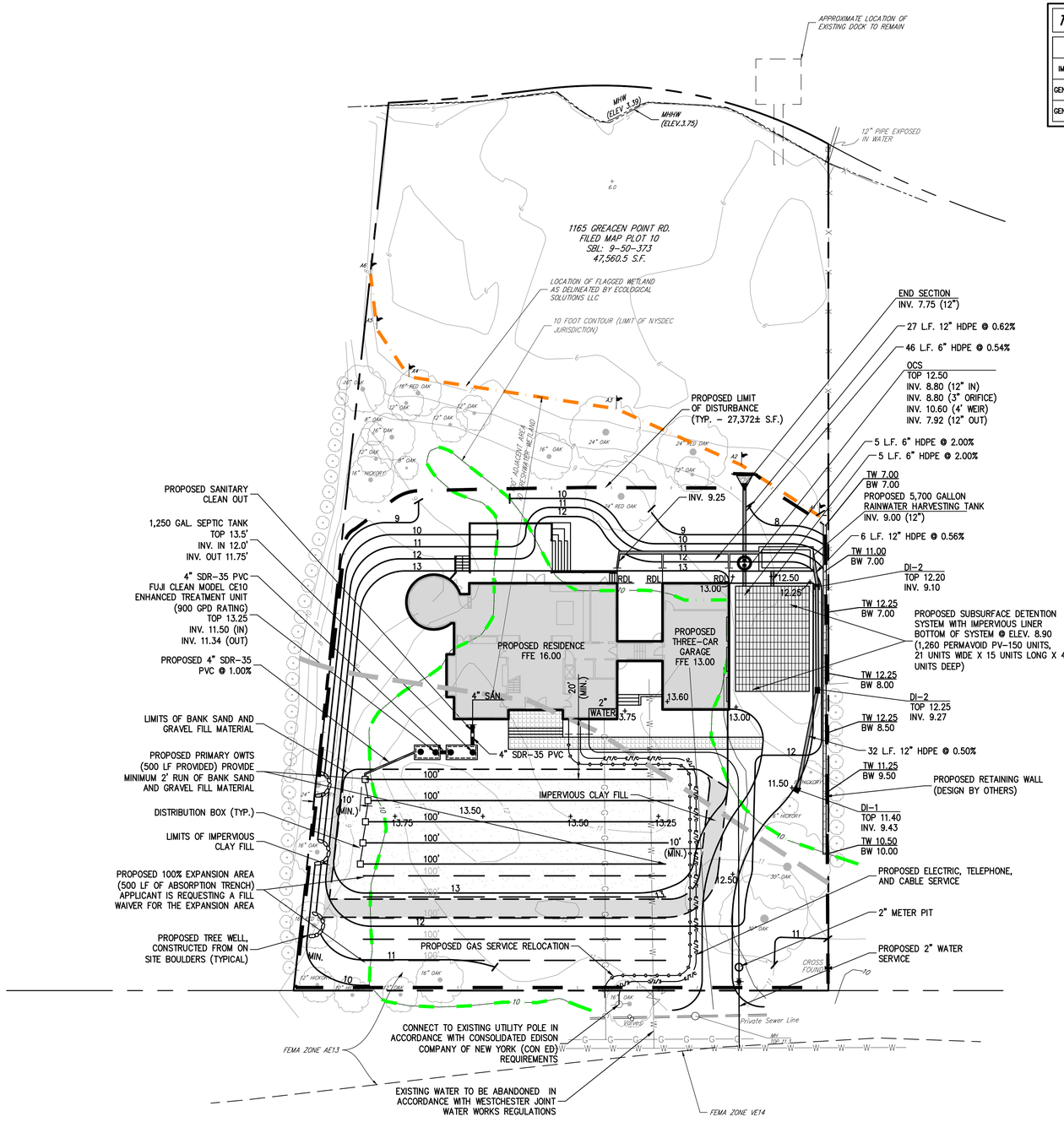

RETAINING WALL SPOT GRADE LEGEND

(PROPOSED GRADE) TW + + BW (PROPOSED GRADE)

TOTAL FILL REQUIRED FOR SITE (CUBIC YARDS)

RUN OF BANK FILL (SEPTIC AREA)	400
IMPERVIOUS CLAY FILL (SEPTIC AREA)	100
GENERAL FILL (EXCLUDING SEPTIC AREA)	1,100
GENERAL CUT (EXCLUDING SEPTIC AREA)	0

LEGEND

- EXISTING PROPERTY LINE
- ADJACENT PROPERTY LINE
- EXISTING EASEMENT LINE
- EXISTING BUILDING OVERHANG
- EXISTING BUILDING LINE
- EXISTING PAVEMENT EDGE
- EXISTING CONTOUR
- EXISTING INDEX CONTOUR
- EXISTING FENCE
- EXISTING MANHOLE
- EXISTING WATER VALVE
- EXISTING UTILITY POLE
- 36" RCP — EXISTING STORM DRAIN LINE AND SIZE
- 8" SAN — EXISTING SANITARY LINE AND SIZE
- EXISTING WATER LINE
- EXISTING GAS LINE
- EXISTING OVERHEAD WIRES
- EXISTING WETLAND LIMITS
- EXISTING WETLAND SETBACK
- USGS 10 FOOT CONTOUR (NYSDEC JURISDICTIONAL LINE)
- PROPOSED BUILDING LINE
- PROPOSED STONE CURB
- PROPOSED PAVER WALKWAY
- PROPOSED FINISHED GRADE
- PROPOSED SPOT GRADE
- PROPOSED RETAINING WALL (DESIGN BY OTHERS)
- PROPOSED CLEANOUT
- 2" WATER — PROPOSED WATER LINE & SIZE
- PROPOSED WATER VALVE
- PROPOSED 2" SCH. 40 PVC FORCE MAIN
- PRIMARY OWTS FIELD WITH DISTRIBUTION BOX
- EXPANSION FIELD
- PROPOSED UTILITY POLE
- PROPOSED 2,500 GAL. SEPTIC TANK

NOTES:

1. EXISTING CONDITIONS DEPICTED ON THIS PLAN HAVE BEEN TAKEN FROM SURVEY PREPARED BY SPINELLI SURVEYING, DATED 02/22/2018, LAST REVISED 04/23/2020.
2. ALL STORMWATER MANAGEMENT PRACTICES SHALL REMAIN UNDISTURBED AND BE PROTECTED FROM HEAVY MACHINERY TRAFFIC DURING CONSTRUCTION. HOWEVER DURING CONSTRUCTION OF THE PRACTICE THE CONTRACTOR SHALL MINIMIZE AND AVOID HEAVY MACHINERY TRAFFIC TO THE MAXIMUM EXTENT PRACTICABLE. THERE SHALL BE NO STORAGE OF MATERIALS WITHIN AREAS TO BE USED FOR STORMWATER MANAGEMENT PRACTICES. THE CONTRACTOR SHALL INSTALL CONSTRUCTION FENCE AROUND THE PRACTICE TO DISCOURAGE VEHICLE TRAFFIC.
3. ALL FILLS SHALL BE COMPACTED TO PROVIDE STABILITY OF MATERIAL AND TO PREVENT SETTLEMENT.
4. EXCAVATIONS AND FILLS SHALL NOT ENDANGER ADJOINING PROPERTIES, NOR DIVERT WATER ONTO THE PROPERTY OF OTHERS AT ANY TIME DURING THE COURSE OF CONSTRUCTION.
5. CONTRACTOR SHALL REFER TO EROSION AND SEDIMENT CONTROL PLAN FOR FURTHER DIRECTION REGARDING SITE STABILIZATION THROUGHOUT THE COURSE OF CONSTRUCTION.
6. UNLESS OTHERWISE SPECIFIED, PIPE FOR WATER LINES SHALL TYPE "K" PIPE IN ACCORDANCE WITH AWWA C-900.
7. ELECTRIC, TELEPHONE, AND CABLE TELEVISION LINES SHALL BE INSTALLED UNDERGROUND IN CONDUIT IN ACCORDANCE WITH THE REQUIREMENTS OF THE UTILITY COMPANY HAVING JURISDICTION.

ANY ALTERATION OF PLANS, SPECIFICATIONS, PLATS AND REPORTS BEARING THE SEAL OF A LICENSED PROFESSIONAL ENGINEER OR LICENSED LAND SURVEYOR IS A VIOLATION OF SECTION 7209 OF THE NEW YORK STATE EDUCATION LAW, EXCEPT AS PROVIDED FOR BY SECTION 7209, SUBSECTION 2.

No.	Revision	Date	By
1.	REVISED BUILDING FOOTPRINT	04/11/2019	SPG
2.	UPDATED WETLAND LINES	02/28/2020	RC
3.	UPDATED SURVEY	05/11/2020	RAR
4.	REVISED PER VILLAGE COMMENTS	06/08/2020	RAR
5.	RESUBMIT TO VILLAGE HCZMC	07/01/2020	RAR

Previous Editions Obsolete

APPLICANT/OWNER:
MR. WILLIAM FEDYNA & ELISABETH FEDYNA
219 W 81ST STREET, APT. 9D
NEW YORK, NY, 10024

ARCHITECT:
ARCHI-TECTONICS
111 JOHN ST. #700
NEW YORK, NY 10038

JMC Planning, Engineering, Landscape Architecture & Land Surveying, PLLC
JMC Site Development Consultants, LLC
John Meyer Consulting, Inc.
120 BEDFORD ROAD • ARMONK, NY 10504
voice 914.273.5225 • fax 914.273.2102
www.jmcpllc.com

GRADING & UTILITY PLAN

RESIDENTIAL DEVELOPMENT
1165 GREACEN POINT ROAD
MAMARONECK, NY, 10543

Drawn:	SMN	Approved:	JAR
Scale:	1" = 20'		
Date:	07/24/2018		
Project No:	18100		
18100-SITE	GRAD UTIL	GRADUTIL.scr	

Drawing No:
C-200

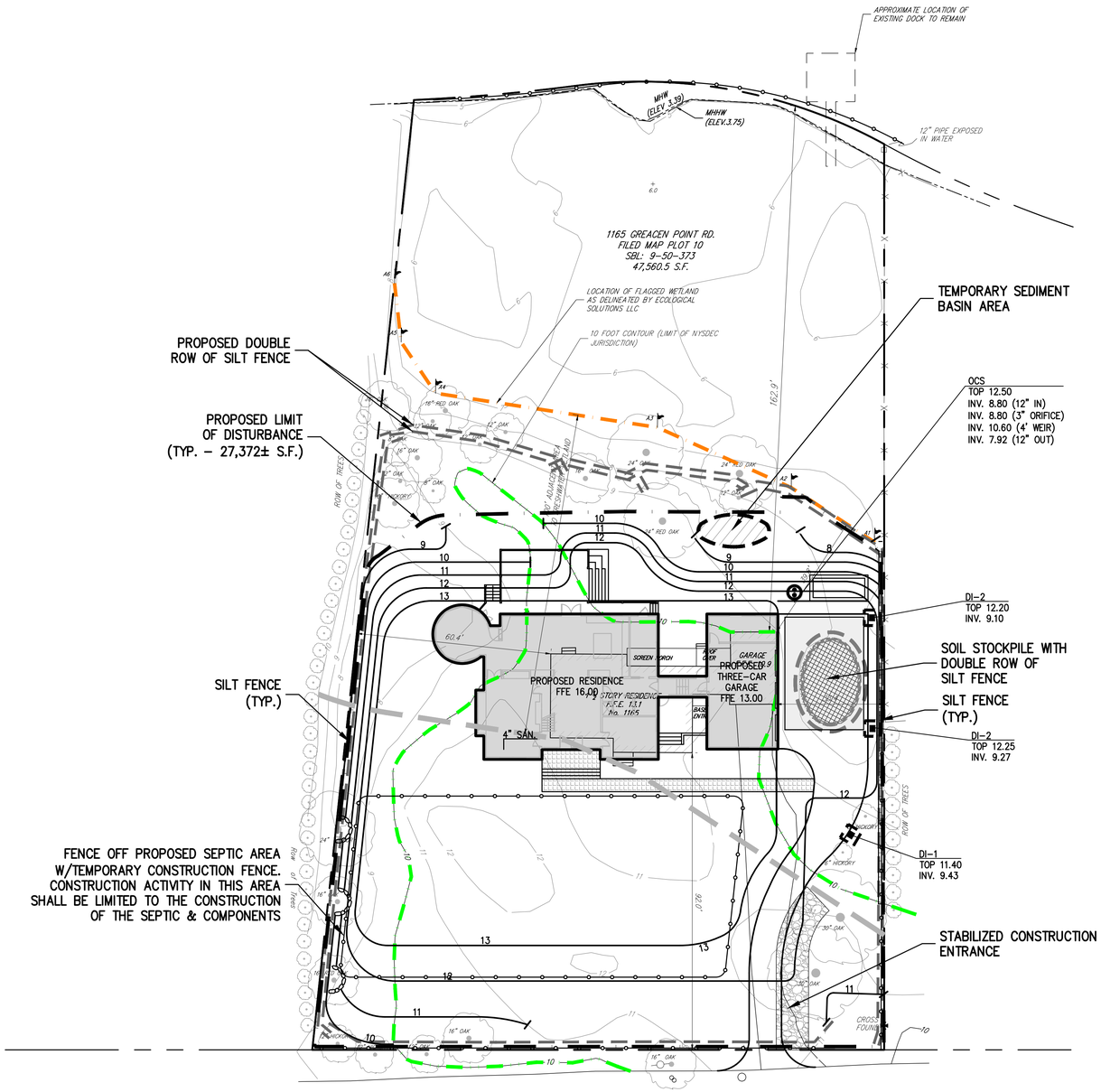

NOTES:

1. EXISTING CONDITIONS DEPICTED ON THIS PLAN HAVE BEEN TAKEN FROM SURVEY PREPARED BY SPINELLI SURVEYING, DATED 02/22/2018, LAST REVISED 04/23/2020.
2. THIS PLAN IS FOR TEMPORARY EROSION AND SEDIMENT CONTROL INFORMATION ONLY.
3. PRIOR TO BEGINNING ANY CLEARING, GRUBBING OR EXCAVATION, ALL EROSION AND SEDIMENT CONTROL MEASURES SHALL BE INSTALLED IN ACCORDANCE WITH ALL THE PLANS AND SPECIFICATIONS. EROSION AND SEDIMENT CONTROL MEASURES SHALL BE MAINTAINED UNTIL THE SITE IS STABILIZED. FINAL STABILIZATION OF LANDSCAPED AREAS SHALL BE IN ACCORDANCE WITH THE LANDSCAPE PLAN.
4. THE CONTRACTOR SHALL INSPECT AND MAINTAIN ON-SITE EROSION AND SEDIMENT CONTROL MEASURES ON A DAILY BASIS. ALL COLLECTED SEDIMENT WITHIN SEDIMENT BARRIERS SHALL BE REMOVED PERIODICALLY AS REQUIRED TO MAINTAIN THE FUNCTION OF THE SEDIMENT BARRIERS. ALL SEDIMENT COLLECTED SHALL BE RESPREAD ON-SITE WITHIN STABILIZED AREAS AS DIRECTED BY THE OWNERS REPRESENTATIVE.
5. THE CONTRACTOR SHALL INSPECT DOWNSTREAM CONDITIONS FOR EVIDENCE OF SEDIMENTATION ON A WEEKLY BASIS, AFTER EACH RAINSTORM, AND AS MAY BE REQUIRED OR DIRECTED BY ALL APPLICABLE APPROVALS AND PERMITS. THE CONTRACTOR SHALL IMMEDIATELY PROVIDE A WRITTEN REPORT ON FINDINGS OF SEDIMENT IN DOWNSTREAM AREAS TO ALL AUTHORITIES HAVING JURISDICTION AND MAKE REPAIRS AS REQUIRED OR DIRECTED.
6. ADDITIONAL EROSION AND SEDIMENT CONTROL MEASURES SHALL BE INSTALLED BY THE CONTRACTOR AS REQUIRED/WARRANTED BY FIELD CONDITIONS AND AS DIRECTED BY THE OWNERS REPRESENTATIVE, JMC, AND/OR ANY AUTHORITY HAVING JURISDICTION.
7. STOCKPILING OF CONSTRUCTION MATERIAL SHALL BE PLACED ON-SITE IN THE AREA DESIGNATED ON THIS PLAN OR AS APPROVED BY THE OWNERS REPRESENTATIVE. STOCKPILED EXCAVATED MATERIAL SHALL HAVE TWO ROWS OF SILT FENCE LOCATED AROUND ITS PERIMETER. ALL STOCKPILED MATERIAL SHALL BE MAINTAINED IN AN ORDERLY MANNER SO AS NOT TO IMPEDE ON PEDESTRIAN AND/OR VEHICULAR TRAFFIC CIRCULATION ROUTES.
7. DUST SHALL BE CONTROLLED BY SPRINKLING OR OTHER APPROVED METHODS AS NECESSARY, OR AS DIRECTED BY THE OWNERS REPRESENTATIVE.
8. ALL STORMWATER MANAGEMENT PRACTICES SHALL REMAIN UNDISTURBED AND BE PROTECTED FROM HEAVY MACHINERY TRAFFIC DURING CONSTRUCTION. HOWEVER DURING CONSTRUCTION OF THE PRACTICE THE CONTRACTOR SHALL MINIMIZE AND AVOID HEAVY MACHINERY TRAFFIC TO THE MAXIMUM EXTENT PRACTICABLE. THERE SHALL BE NO STORAGE OF MATERIALS WITHIN AREAS TO BE USED FOR STORMWATER MANAGEMENT PRACTICES. THE CONTRACTOR SHALL INSTALL CONSTRUCTION FENCE AROUND THE PRACTICE TO DISCOURAGE VEHICLE TRAFFIC.
9. ALL EXPOSED SLOPES AND GRADED/DISTURBED AREAS, THAT WILL NOT BE FURTHER DISTURBED WITHIN 14 CALENDAR DAYS (7 DAYS FOR CONSTRUCTION SITES THAT EITHER DIRECTLY DISCHARGE TO ONE OF THE 303(d) SEGMENTS LISTED IN APPENDIX E OF THE GENERAL PERMIT OR ARE LOCATED WITHIN ONE OF THE WATERSHEDS LISTED IN APPENDIX C OF THE GENERAL PERMIT), SHALL BE TEMPORARILY SEEDED WITHIN 24 HOURS OF DISTURBANCE, IN ACCORDANCE WITH THE NEW YORK STATE DEPARTMENT OF ENVIRONMENTAL CONSERVATION (NYSDEC) "EROSION AND SEDIMENT CONTROL GUIDELINES" AND THE ANSI A300 "BEST MANAGEMENT PRACTICES FOR TREE AND SHRUB PLANTING, TRANSPLANTING, MAINTENANCE AND CARE," PREPARED BY THE INTERNATIONAL SOCIETY OF ARBORICULTURE (ISA), LATEST EDITIONS, AS FOLLOWS:
   A. SEED MIXTURE AND RATE OF APPLICATION:
      A.1. IN SPRING, SUMMER OR EARLY FALL, SEED THE AREA WITH RYEGRASS (ANNUAL OR PERENNIAL) AT 30 POUNDS PER ACRES (APPROXIMATELY 0.7 POUNDS/1000 SQUARE FEET OR USE 1 POUND/1000 SQUARE FEET).
      A.2. IN LATE FALL OR EARLY WINTER, SEED THE AREA WITH CERTIFIED "AROOSTOOK" WINTER RYE (CEREAL RYE) AT 100 POUNDS PER ACRE (2.5 POUNDS/1000 SQUARE FEET).
   B. APPLICATION SHALL BE UNIFORM BY MECHANICAL OR HYDROSEED METHODS.
   C. MULCH ALL SEEDED AREAS WITH STRAW AT A RATE OF 2 TONS PER ACRE (90 POUNDS PER 1,000 SQUARE FEET) SUCH THAT THE MULCH FORMS A CONTINUOUS BLANKET.
10. ALL SEEDED AREAS SHALL BE FERTILIZED, RESEEDED, AND MULCHED AS NECESSARY TO MAINTAIN VIGOROUS, DENSE VEGETATIVE COVER.
11. TEMPORARY SEED MIXTURES SHALL NOT BE PLACED ON AREAS WHERE FINAL GRADE HAS BEEN ESTABLISHED AND TOPSOIL HAS BEEN PLACED UNLESS OTHERWISE DIRECTED BY THE PROJECT LANDSCAPE ARCHITECT.

LEGEND

- EXISTING WETLAND SETBACK
- PROPOSED SILT FENCE
- PROPOSED LIMIT OF DISTURBANCE
- PROPOSED CONSTRUCTION FENCE
- PROPOSED STABILIZED CONSTRUCTION ENTRANCE
- PROPOSED STOCKPILE AREA

SEQUENCE OF CONSTRUCTION

CONSTRUCTION SHALL BE SEQUENCED IN SUCH A MANNER THAT ANY AREA WHICH IS DISTURBED SHALL FIRST BE PROTECTED WITH SEDIMENT EROSION CONTROLS AS INDICATED ON THIS PLAN. PARTICULAR REQUIREMENTS ARE GIVEN AS FOLLOWS:

1. DEMOLITION OF EXISTING BUILDINGS AS REQUIRED.
2. INSTALLATION OF SEDIMENT AND EROSION CONTROL MEASURES AS INDICATED ON THIS PLAN.
3. CLEAR UNDEVELOPED PORTION OF PROPERTY WHICH IS TO BE DEVELOPED.
4. STRIP AND STOCKPILE TOPSOIL.
5. BEGIN BUILDING AND PARKING LOT CONSTRUCTION, ROUGH GRADING.
6. INSTALL STORM DRAIN SYSTEM COMPLETE (IMMEDIATELY INSTALL HAYBALE FILTERS ON ALL INLETS).
7. INSTALL PUBLIC UTILITIES (GAS, ELECTRIC AND TELEPHONE) AS REQUIRED.
8. INSTALL CONCRETE AND ASPHALT CONCRETE PAVEMENT COMPLETE.
9. FINISH GRADING, REDISTRIBUTE TOPSOIL AND ESTABLISH VEGETATION AND/OR LANDSCAPING.
10. CLEAN PAVEMENTS AND STORM DRAIN SYSTEM OF ALL ACCUMULATED SEDIMENT IN CONJUNCTION WITH THE REMOVAL OF ALL TEMPORARY SEDIMENT AND EROSION CONTROL DEVICES.
11. COMPLETE SITE AND BUILDING CONSTRUCTION.

APPLICANT/OWNER:
MR. WILLIAM FEDYNA & ELISABETH FEDYNA
219 W 81ST STREET, APT. 9D
NEW YORK, NY, 10024

ARCHITECT:
ARCHI-TECTONICS
111 JOHN ST. #700
NEW YORK, NY 10038

JMC Planning, Engineering, Landscape Architecture & Land Surveying, PLLC
JMC Site Development Consultants, LLC
John Meyer Consulting, Inc.
120 BEDFORD ROAD • ARMONK, NY 10504
voice 914.273.5225 • fax 914.273.2102
www.jmcpllc.com

EROSION & SEDIMENT CONTROL PLAN

RESIDENTIAL DEVELOPMENT
1165 GREACEN POINT ROAD
MAMARONECK, NY, 10543

ANY ALTERATION OF PLANS, SPECIFICATIONS, PLATS AND REPORTS BEARING THE SEAL OF A LICENSED PROFESSIONAL ENGINEER OR LICENSED LAND SURVEYOR IS A VIOLATION OF SECTION 7209 OF THE NEW YORK STATE EDUCATION LAW, EXCEPT AS PROVIDED FOR BY SECTION 7209, SUBSECTION 2.

No.	Revision	Date	By
1.	REVISED BUILDING FOOTPRINT	04/11/2019	SPG
2.	UPDATED WETLAND LINES	02/28/2020	RC
3.	UPDATED SURVEY	05/11/2020	RAR
4.	REVISED PER VILLAGE COMMENTS	06/08/2020	RAR
5.	RESUBMIT TO VILLAGE HCZMC	07/01/2020	RAR

Previous Editions Obsolete

Drawn:	SMN	Approved:	JAR
Scale:	1" = 20'		
Date:	07/24/2018		
Project No:	18100		
18100-SITE	SE	SE.scr	
Drawing No:	C-300		

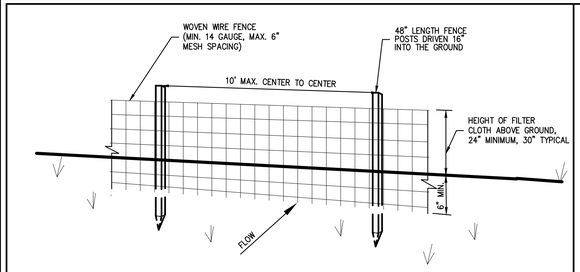

PERSPECTIVE VIEW

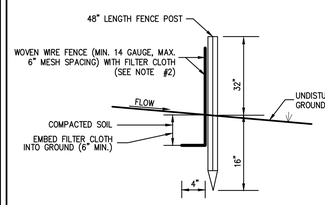

SECTION

SLOPE	STEEPNESS	SLOPE LENGTH/FENCE LENGTH (FT.)
2–10%	50:1 TO 10:1	250/2000
10–20%	10:1 TO 5:1	150/1000
20–33%	5:1 TO 3:1	80/750
33–50%	3:1 TO 2:1	70/350
>50%	>2:1	30/175

*ALL SILT FENCES SHALL BE PLACED AS CLOSE TO THE DISTURBED AREA AS POSSIBLE, BUT AT LEAST 10 FEET FROM THE TOE OF A SLOPE STEEPER THAN 3H:1V, TO ALLOW FOR MAINTENANCE AND ROLL DOWN. THE AREA BEYOND THE FENCE MUST BE UNDISTURBED OR STABILIZED.

NOTES:

1. WOVEN WIRE FENCE SHALL BE FASTENED SECURELY TO FENCE POSTS WITH WIRE TIES OR STAPLES. POSTS SHALL BE STEEL, EITHER T OR U TYPE OR HARDWOOD.
2. FILTER CLOTH SHALL BE FASTENED SECURELY TO WOVEN WIRE FENCE WITH TIES SPACED EVERY 24" AT TOP AND MID SECTION. FENCE SHALL BE WOVEN WIRE, 6" MAXIMUM MESH OPENING.
3. WHEN TWO SECTIONS OF FILTER CLOTH ADJOIN EACH OTHER, THEY SHALL BE OVERLAPPED BY SIX INCHES AND FOLDED. FILTER CLOTH SHALL BE EITHER FILTER X, MIRAFI 100X, STABLINKA T140N, OR APPROVED EQUAL.
4. PREFABRICATED UNITS SHALL BE GEOFAB, ENVIROFENCE, OR APPROVED EQUAL.
5. MAINTENANCE SHALL BE PERFORMED AS NEEDED AND MATERIAL REMOVED AND REPLACED WHEN "BULGES" DEVELOP IN THE SILT FENCE.

SILT FENCE — 1

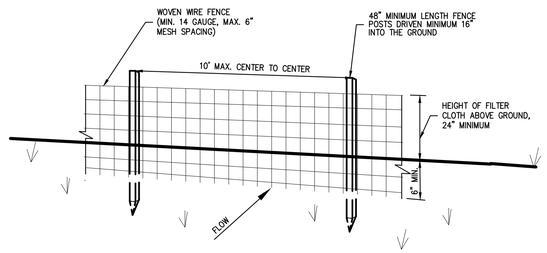

PERSPECTIVE VIEW

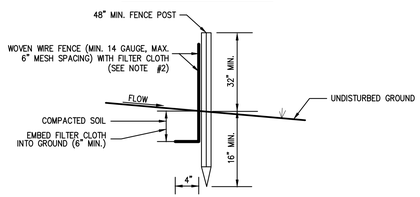

SECTION

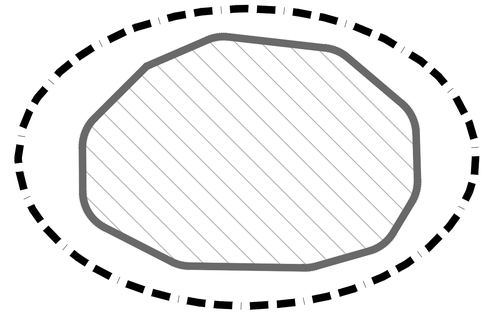

PLAN VIEW

NOTES:

1. WOVEN WIRE FENCE SHALL BE FASTENED SECURELY TO FENCE POSTS WITH WIRE TIES OR STAPLES. POSTS SHALL BE STEEL, EITHER T OR U TYPE OR HARDWOOD.
2. FILTER CLOTH SHALL BE FASTENED SECURELY TO WOVEN WIRE FENCE WITH TIES SPACED EVERY 24" AT TOP AND MID SECTION. FENCE SHALL BE WOVEN WIRE, 6" MAXIMUM MESH OPENING.
3. WHEN TWO SECTIONS OF FILTER CLOTH ADJOIN EACH OTHER, THEY SHALL BE OVERLAPPED BY SIX INCHES AND FOLDED. FILTER CLOTH SHALL BE EITHER FILTER X, MIRAFI 100X, STABLINKA T140N, OR APPROVED EQUAL.
4. PREFABRICATED UNITS SHALL BE GEOFAB, ENVIROFENCE, OR APPROVED EQUAL.
5. MAINTENANCE SHALL BE PERFORMED AS NEEDED AND MATERIAL REMOVED AND REPLACED WHEN "BULGES" DEVELOP IN THE SILT FENCE.
6. THE AREA CHOSEN FOR ALL TEMPORARY SOIL STOCKPILES SHALL BE DRY AND STABLE.
7. ALL STOCKPILED SOIL SHALL NOT CONTAIN SLOPES GREATER THAN 2:1.
8. UPON COMPLETION OF SOIL STOCKPILING, EACH PILE SHALL BE SEEDED WITHIN 24 HOURS. PERENNIAL OR ANNUAL RYEGRASS SHALL BE PLANTED DURING SPRING, SUMMER OR EARLY FALL. WINTER RYE (CEREAL RYE) SHALL BE PLANTED DURING LATE FALL OR EARLY WINTER.
9. ALL STOCKPILES SHALL BE PROTECTED WITH SILT FENCING INSTALLED AROUND THE PERIMETER.

TEMPORARY SOIL STOCKPILE WITH SILT FENCE — 2

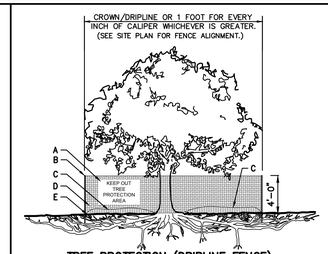

TREE PROTECTION (DRIPLINE FENCE)

A	8.5"X11" SIGN LAMINATED IN PLASTIC SPACED EVERY 50' ALONG FENCE
B	2"X6' STEEL POSTS OR APPROVED EQUAL.
C	5" THICK LAYER OF MULCH.
D	TREE PROTECTION FENCE: HIGH DENSITY POLYETHYLENE FENCING WITH 3.5" X 1.5" OPENINGS; COLOR ORANGE. STEEL POSTS INSTALLED AT 8' O.C.
E	MAINTAIN EXISTING GRADE WITHIN THE TREE PROTECTION FENCE UNLESS OTHERWISE INDICATED ON THE PLANS.
F	INSTALL ROUGH SAWN WOOD WHERE AND AS DIRECTED BY PROJECT LANDSCAPE ARCHITECT OR PROFESSIONAL ARBORIST. SEE CHART FOR WOOD SIZE BOUND WITH 9 GAUGE WIRE.
G	8"–12" THICK LAYER OF MULCH ON MAINTENANCE ROAD. 5" THICK LAYER INSIDE TREE PROTECTION AREA.

TREE DIAMETER	ROUGH SAWN WOOD SIZE
<12"	2"X2"
13"–24"	2"X4"
>25"	2"X6"

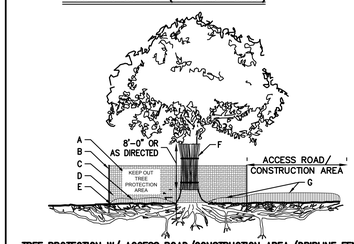

TREE PROTECTION W/ ACCESS ROAD/CONSTRUCTION AREA (DRIPLINE FENCE)

NOTES:

1. SEE SPECIFICATIONS FOR ADDITIONAL TREE PROTECTION REQUIREMENTS.
2. IF THERE IS NO EXISTING IRRIGATION, SEE SPECIFICATIONS FOR WATERING REQUIREMENTS.
3. NO PRUNING SHALL BE PERFORMED EXCEPT BY APPROVED ARBORIST.
4. NO EQUIPMENT SHALL OPERATE INSIDE THE PROTECTIVE FENCING INCLUDING DURING FENCE INSTALLATION AND REMOVAL.
5. SEE SITE PLANS FOR IDENTIFICATIONS/LOCATIONS OF INDIVIDUAL TREES TO BE PROTECTED.
6. ALL EXCAVATION WITHIN THE CROWN/DRIPLINE OF ANY TREE SHALL BE PERFORMED UNDER THE DIRECT SUPERVISION OF THE PROJECT LANDSCAPE ARCHITECT OR PROFESSIONAL ARBORIST. SPECIAL MEASURES, SUCH AS THE USE OF AN AIR SPADE MAY BE REQUIRED.
7. THE CONTRACTOR MAY PROPOSE THE USE OF ENGINEERED MATTING OR OTHER ENGINEERED PRODUCTS IN LIEU OF MULCH, WHICH SHALL BE SUBJECT TO THE REVIEW AND APPROVAL OF ALL AUTHORITIES HAVING JURISDICTION.

TREE PROTECTION — 3

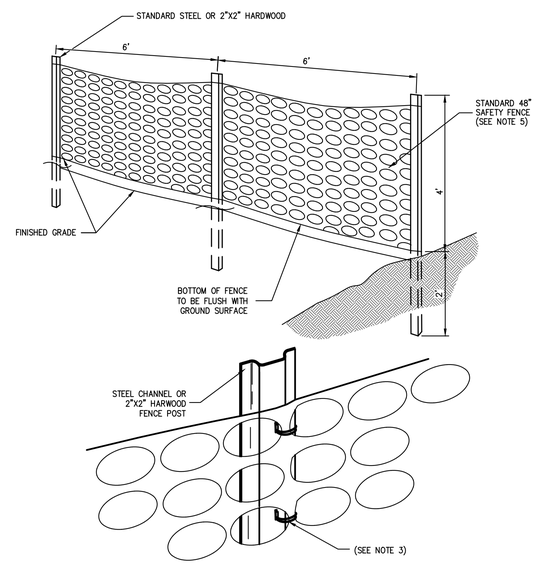

NOTES:

1. SPACE SUPPORT FENCE POSTS AT 6 FOOT INTERVALS.
2. DRIVE SUPPORT POSTS 2 FEET INTO GROUND.
3. FIRMLY FASTEN FENCE MATERIAL IN PLACE BY WIRING TO FENCE POST WHILE MAINTAINING TENSION ACROSS FULL HEIGHT OF FENCE. WIRING SHALL BE DONE IN A MANNER THAT WILL PREVENT SAGGING OF FENCE MATERIAL.
4. PROVIDE PERIODIC INSPECTION AND MAINTENANCE OF FENCE INCLUDING REPAIRS AS NECESSARY AND REQUIRED.
5. PLASTIC FENCE SHALL BE INTERNATIONAL ORANGE COLOR, AS MANUFACTURED BY ADPI ENTERPRISES, INC. OR APPROVED EQUAL.
6. REMOVE CONSTRUCTION FENCE AS DIRECTED BY THE OWNER'S FIELD REPRESENTATIVE.

CONSTRUCTION FENCE — 4

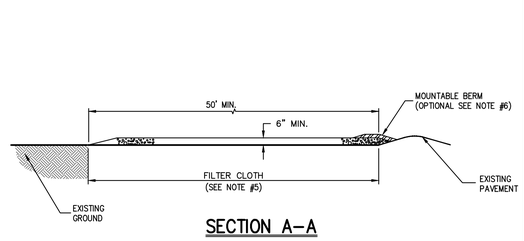

SECTION A–A

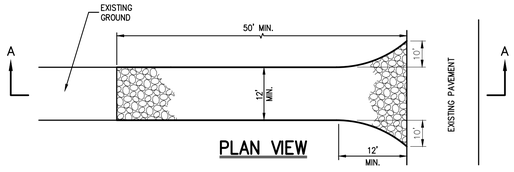

PLAN VIEW

NOTES

1. STONE SIZE – USE 1" TO 4" STONE, OR RECLAIMED OR RECYCLED CONCRETE EQUIVALENT.
2. LENGTH – AS REQUIRED, BUT NOT LESS THAN 50 FEET.
3. THICKNESS – NOT LESS THAN SIX (6) INCHES.
4. WIDTH – 12 FOOT MINIMUM, BUT NOT LESS THAN THE FULL WIDTH AT POINTS WHERE INGRESS OR EGRESS OCCURS. 24 FOOT MINIMUM IF SINGLE ENTRANCE TO SITE.
5. FILTER CLOTH TO BE PLACED OVER THE ENTIRE WIDTH AND LENGTH OF AREA PRIOR TO PLACING OF STONE.
6. SURFACE WATER – ALL SURFACE WATER FLOWING OR DIVERTED TOWARD CONSTRUCTION ENTRANCES SHALL BE PIPED BENEATH THE ENTRANCE. IF PIPING IS IMPRACTICAL, A MOUNTABLE BERM WITH 5:1 SLOPES WILL BE PERMITTED.
7. MAINTENANCE – THE ENTRANCE SHALL BE MAINTAINED IN A CONDITION WHICH WILL PREVENT TRACKING OR FLOWING OF SEDIMENT ONTO PUBLIC RIGHTS–OF–WAY. THIS MAY REQUIRE PERIODIC TOP DRESSING WITH ADDITIONAL STONE AS CONDITIONS DEMAND AND REPAIR AND/OR CLEANOUT OF ANY MEASURE USED TO TRAP SEDIMENT. ALL SEDIMENT SPILLED, DROPPED, WASHED OR TRACKED ONTO PUBLIC RIGHTS–OF–WAY MUST BE REMOVED IMMEDIATELY.
8. WASHING – WHEELS SHALL BE CLEANED TO REMOVE SEDIMENT PRIOR TO ENTRANCE ONTO PUBLIC RIGHTS–OF–WAY. WHEN WASHING IS REQUIRED, IT SHALL BE DONE ON AN AREA STABILIZED WITH STONE AND WHICH DRAINS INTO AN APPROVED SEDIMENT TRAPPING DEVICE.
9. PERIODIC INSPECTION AND NEEDED MAINTENANCE SHALL BE PROVIDED AFTER EACH RAIN.

STABILIZED CONSTRUCTION ENTRANCE — 5

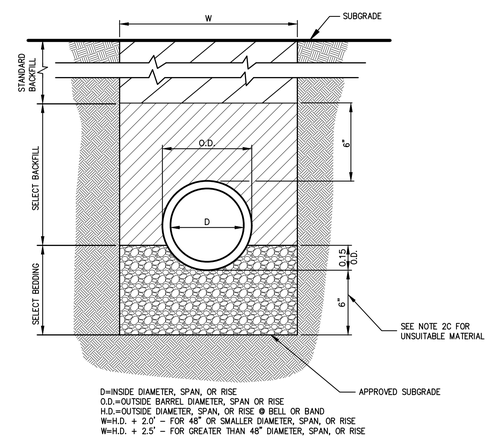

NOTES:

1. FOR TYPE II TRENCH, MATERIAL FOR SELECT BEDDING AND SELECT BACKFILL SHALL BE:
   A. EITHER SAND OR CRUSHED STONE IF NO WATER IS ENCOUNTERED IN TRENCH.
   B. 3/4"CRUSHED STONE IF WATER IS ENCOUNTERED IN TRENCH.
2. TYPE II TRENCH SHALL BE USED IN ALL OF THE FOLLOWING CASES:
   A. FOR ALL CORRUGATED POLYETHYLENE DRAIN PIPE (CPDP) AND PVC PIPE AND CONDUIT INSTALLATION.
   B. WHEN ROCK OR HARDPAN IS ENCOUNTERED IN BOTTOM OF TRENCH.
   C. WHEN UNSUITABLE MATERIAL IS ENCOUNTERED IN BOTTOM OF TRENCH. IN SUCH CASE DEPTH OF UNDERCUTTING SHALL BE AS DIRECTED BY THE ENGINEER WITH 6" MINIMUM.
3. FOR ALL TRENCH EXCAVATION IN FILL AREAS, ALL EMBANKMENTS SHALL BE CONSTRUCTED TO A MINIMUM OF 2 FEET ABOVE THE OUTSIDE TOP (AT THE BELL) OF THE PIPE PRIOR TO BEGINNING ANY TRENCH EXCAVATION.
4. BACKFILL FOR PIPE AND CONDUIT SHALL BE PLACED EVENLY AND CAREFULLY AROUND AND OVER THE PIPE OR CONDUIT IN SIX (6) INCH MAXIMUM LAYERS. EACH LAYER SHALL BE THOROUGHLY AND CAREFULLY COMPACTED UNTIL TWELVE (12) INCHES OF COVER EXISTS OVER THE PIPE OR CONDUIT. THE REMAINDER OF THE BACKFILL MAY THEN BE PLACED AND COMPACTED IN A MAXIMUM OF TWELVE (12) INCH LAYERS. EACH LAYER SHALL BE COMPACTED BY APPROVED MECHANICAL TAMPING MACHINES. UNLESS OTHERWISE SPECIFIED BACKFILL SHALL BE COMPACTED TO NOT LESS THAN 92% MAXIMUM MODIFIED DENSITY IN ACCORDANCE WITH ASTM DESIGNATION D–1557 IN THE MANNER HEREIN DESCRIBED. BACKFILL SHALL PROCEED UP TO THE LINES AND GRADES AS SHOWN ON THE DRAWINGS.

TYPE II TRENCH — 6

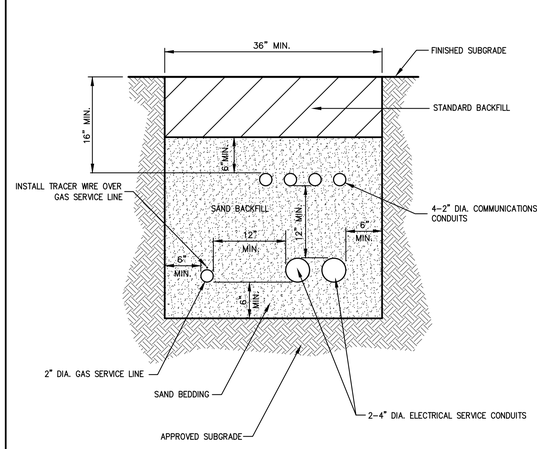

NOTES:

1. UTILITIES TO BE INSTALLED IN ACCORDANCE WITH THE REGULATIONS AND REQUIREMENTS OF THE UTILITY COMPANY HAVING JURISDICTION.
2. BACKFILL FOR PIPE AND CONDUIT SHALL BE PLACED EVENLY AND CAREFULLY AROUND AND OVER THE PIPE OR CONDUIT IN SIX (6) INCH MAXIMUM LAYERS. EACH LAYER SHALL BE THOROUGHLY AND CAREFULLY COMPACTED UNTIL TWELVE (12) INCHES OF COVER EXISTS OVER THE PIPE OR CONDUIT. THE REMAINDER OF THE BACKFILL MAY THEN BE PLACED AND COMPACTED IN A MAXIMUM OF TWELVE (12) INCH LAYERS. EACH LAYER SHALL BE COMPACTED BY APPROVED MECHANICAL TAMPING MACHINES. UNLESS OTHERWISE SPECIFIED BACKFILL SHALL BE COMPACTED TO NOT LESS THAN 92% MAXIMUM MODIFIED DENSITY IN ACCORDANCE WITH ASTM DESIGNATION D–1557 IN THE MANNER HEREIN DESCRIBED. BACKFILL SHALL PROCEED UP TO THE LINES AND GRADES AS SHOWN ON THE DRAWINGS.
3. CONTRACTOR SHALL STAKE THE PROPOSED SERVICE LINES AND CONDUITS PRIOR TO BACKFILLING TO ENSURE SERVICES DO NOT MOVE WITHIN TRENCH.

UTILITY TRENCH DETAIL — 7

No.	Revision	Date
1.	REVISED BUILDING FOOTPRINT	04/11/2019
2.	UPDATED WETLAND LINES	02/28/2020
3.	UPDATED SURVEY	05/11/2020
4.	REVISED PER VILLAGE COMMENTS	06/08/2020
5.	RESUBMIT TO VILLAGE HC2MC	07/01/2020

Previous Editions Obsolete

JMC Planning, Engineering, Landscape Architecture & Land Surveying, PLLC
JMC Site Development Consultants, LLC
John Meyer Consulting, Inc.
120 BEDFORD ROAD • ARMONK, NY 10504
voice 914.273.5225 • fax 914.273.2102
www.jmcpllc.com

CONSTRUCTION DETAILS

RESIDENTIAL DEVELOPMENT
1165 GREACEN POINT ROAD
MAMARONECK, NY, 10543

ANY ALTERATION OF PLANS, SPECIFICATIONS, PLATS AND REPORTS BEARING THE SEAL OF A LICENSED PROFESSIONAL ENGINEER OR LICENSED LAND SURVEYOR IS A VIOLATION OF SECTION 7209 OF THE NEW YORK STATE EDUCATION LAW, EXCEPT AS PROVIDED FOR BY SECTION 7209, SUBSECTION 2.

Drawn:	SMN	Approved:	JAR
Scale:	NOT TO SCALE		
Date:	07/24/2018		
Project No:	18100		
18100–DETAILS	C–900		–
Drawing No:	C–900		

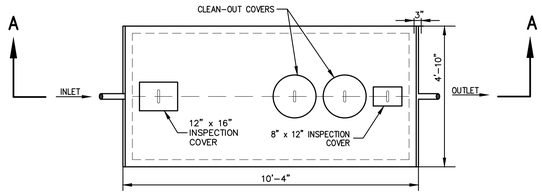

PLAN VIEW

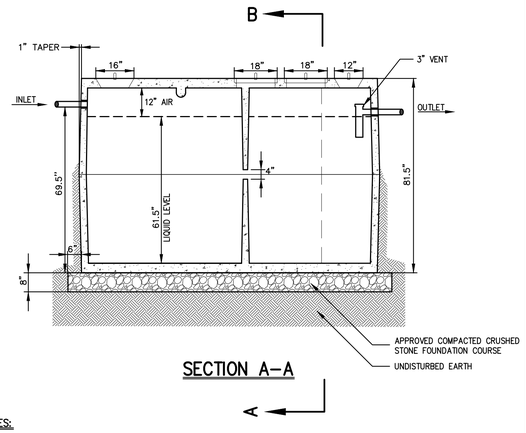

SECTION A–A

NOTES:

1. SEPTIC TANK SHALL BE M&M CONCRETE PRODUCTS, INC. PRODUCT NO. S–1000–12, 1,000 GALLON, OR APPROVED EQUAL.
2. CONCRETE MINIMUM STRENGTH: 4,000 PSI @ 28 DAYS.
3. TANK SHALL BE PLACED ON 3" BED OF SAND OR PEA GRAVEL.

1,500 GALLON SEPTIC TANK | 8

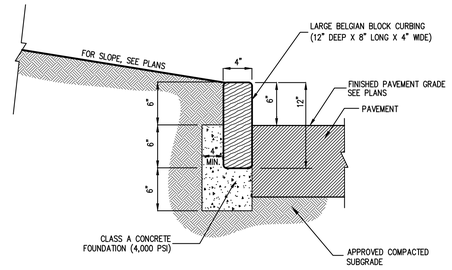

NOTES

1. JOINTS SHALL BE NO WIDER THAN 3/4" AND SHALL BE MORTARED. JOINTS SHALL BE FULLY FILLED WITH 1:2 CEMENT MORTAR, NEATLY POINTED AND CLEANED OF EXCESS MORTAR.

STONE CURB
(BELGIAN BLOCK) | 9

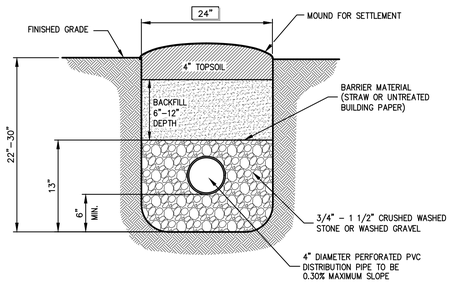

ABSORPTION TRENCH | 10

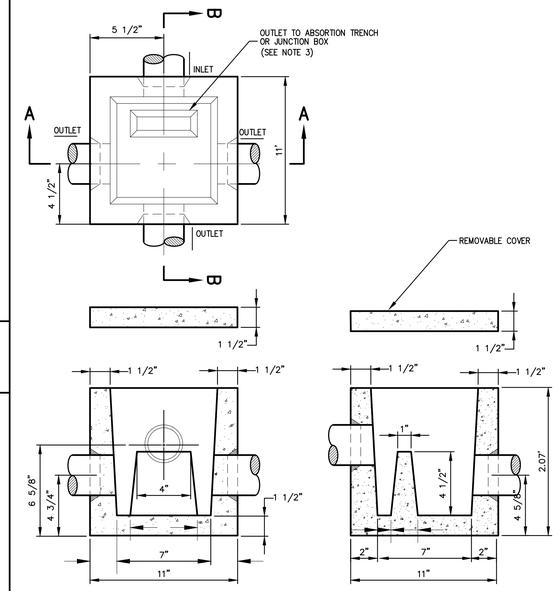

SECTION A–A

SECTION B–B

NOTES

1. DISTRIBUTION BOX SHALL BE PRECAST CONCRETE CONSTRUCTION AND DESIGNED TO ACCOMMODATE AN H–20 DESIGN LOAD.
2. BOTTOM OF BOX SHALL BE LEVEL AND SUPPORTED SOLIDLY BELOW FROST LINE. FOOTING TO EXTEND TO 42" BELLOW GROUND LEVEL.
3. INSTALL TIGHT JOINT PVC PIPE FROM SEPTIC TANK OR EFFLUENT PUMP PIT TO DISTRIBUTION BOX AND BETWEEN ALL JUNCTION BOXES.
4. ALL OUTLETS ARE TO BE AT THE SAME ELEVATION.

3–WAY DISTRIBUTION BOX | 11

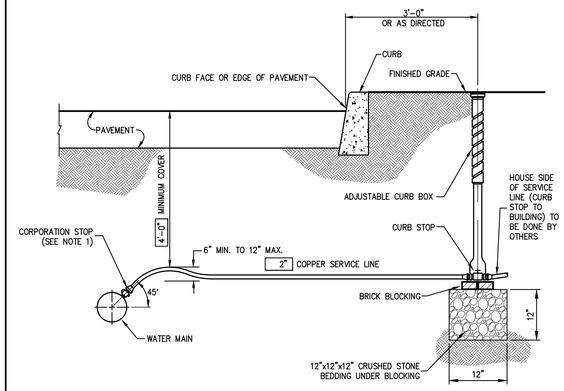

SERVICE LINE REQUIREMENTS

SIZE	SERVICE LINE(MATERIALS)	CORPORATION STOP	CURB STOP	CURB BOX	ENLARGED BASE
2"	COPPER, TYPE K	H–15013 N	H–15214 N	H–10310	H–10349

NOTES:

1. INSTALLATION OF CORPORATION STOPS SHALL BE MADE IN THE UPPER PIPE QUADRANT, BUT MAY BE MADE AT ANGLES LESS THAN 45° IF APPROVED BY THE OWNER'S FIELD REPRESENTATIVE.
2. SERVICE LINE SHALL HAVE NO JOINTS BETWEEN THE WATER MAIN AND CURB STOP.
3. CORPORATION STOP, CURB STOP, CURB BOX AND ENLARGED BASE FOR CURB BOX SHALL BE MUELLER COMPANY OR APPROVED EQUAL. CATALOG NUMBERS SHOWN REFER TO MUELLER COMPANY.
4. ALL SERVICE BRASS SHALL COMPLY WITH AWWA C–800. COMPONENTS IN CONTACT WITH POTABLE WATER SHALL ALSO COMPLY WITH LATEST REQUIREMENTS OF THE FEDERAL SAFE DRINKING WATER ACT.

WATER SERVICE CONNECTION
(2" OR LESS) | 12

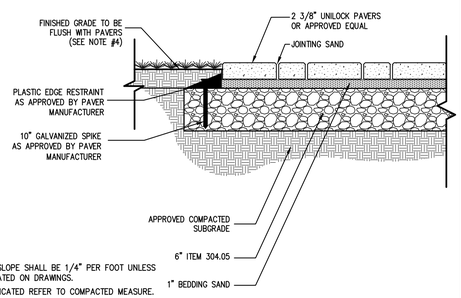

NOTES:

1. MINIMUM CROSS SLOPE SHALL BE 1/4" PER FOOT UNLESS OTHERWISE INDICATED ON DRAWINGS.
2. THICKNESSES INDICATED REFER TO COMPACTED MEASURE.
3. ALL DISTURBED AREAS ADJACENT TO SIDEWALKS SHALL BE TOPSOILED (4" DEPTH) AND SEEDED WITH GRASS.

PAVER INSTALLATION
(PROPOSED WALKWAY) | 13

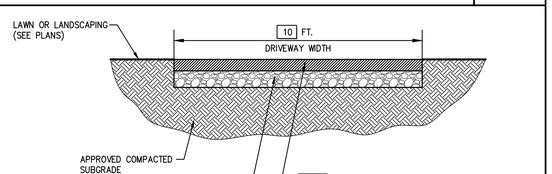

2" TOP COURSE
MATERIAL: ASPHALT CONCRETE, TYPE 6F
MIX/ITEM: NYSDOT ITEM 403.1701

6" BASE/SUBBASE COURSE
MATERIAL: SUBBASE, TYPE 4
MIX/ITEM: NYSDOT ITEM 304.05

NOTES:

1. THICKNESSES INDICATED REFER TO COMPACTED MEASURES.
2. SEE SITE PLANS FOR DRIVEWAY SLOPES.
3. MATERIAL AND MIX/ITEM NUMBERS REFER TO:

NEW YORK STATE DEPARTMENT OF TRANSPORTATION STANDARD SPECIFICATIONS

STANDARD DRIVEWAY | 14

X | X | X

No.	Revision	Date
1.	REVISED BUILDING FOOTPRINT	04/11/2019
2.	UPDATED WETLAND LINES	02/28/2020
3.	UPDATED SURVEY	05/11/2020
4.	REVISED PER VILLAGE COMMENTS	06/08/2020
5.	RESUBMIT TO VILLAGE HC2MC	07/01/2020

Previous Editions Obsolete

JMC Planning, Engineering, Landscape Architecture & Land Surveying, PLLC
JMC Site Development Consultants, LLC
John Meyer Consulting, Inc.
120 BEDFORD ROAD • ARMONK, NY 10504
voice 914.273.5225 • fax 914.273.2102
www.jmcpllc.com

CONSTRUCTION DETAILS

RESIDENTIAL DEVELOPMENT
1165 GREACEN POINT ROAD
MAMARONECK, NY, 10543

ANY ALTERATION OF PLANS, SPECIFICATIONS, PLATS AND REPORTS BEARING THE SEAL OF A LICENSED PROFESSIONAL ENGINEER OR LICENSED LAND SURVEYOR IS A VIOLATION OF SECTION 7209 OF THE NEW YORK STATE EDUCATION LAW, EXCEPT AS PROVIDED FOR BY SECTION 7209, SUBSECTION 2.

Drawn:	SMN	Approved:	JAR
Scale:	NOT TO SCALE		
Date:	07/24/2018		
Project No:	18100		
18100–DETAILS	C–901	–	
Drawing No:	C–901		

LEGEND

- EXISTING PROPERTY LINE
- ADJACENT PROPERTY LINE
- EXISTING PAVEMENT EDGE
- EXISTING CURB LINE
- EXISTING FENCE
- EXISTING TREE AND DESIGNATION
- EXISTING WATER LINE
- EXISTING UTILITY POLE
- EXISTING WETLAND LIMITS
- EXISTING WETLAND SETBACK
- PROPOSED BUILDING LINE
- PROPOSED CONCRETE SIDEWALK
- PROPOSED EDGE OF PAVEMENT
- PROPOSED PAVEMENT HATCH
- PROPOSED RETAINING WALL (DESIGN BY OTHERS)
- PROPOSED TREES
- PROPOSED SHRUBS/GRASSES

NOTES:

1. EXISTING CONDITIONS DEPICTED ON THIS PLAN HAVE BEEN TAKEN FROM SURVEY PREPARED BY SPINELLI SURVEYING, DATED 02/22/2018, LAST REVISED 04/23/2020.

PLANT SCHEDULE

TREES	QTY	BOTANICAL NAME	COMMON NAME	SIZE	ROOT COND.	REMARKS	PHOTO SAMPLE
AR	2	Acer rubrum	Red Maple	3" - 3.5" Cal.	B & B	N/A	
SHRUBS							
IW	23	Ilex verticillata	Winterberry	6' - 7' Ht.	Cont.	N/A	
LB	2	Lindera benzoin	Spicebush	5 gal.	Cont.	N/A	
PERENNIALS							
AT	39	Asclepias tuberosa	Butterfly Milkweed	2' - 3' Ht.	Cont.	N/A	
ET	17	Euthamia tenuifolia	Goldenrod	3' - 6' Ht.	Cont.	N/A	
GRASSES							
AV	19	Andropogon virginicus	Broomsedge	2' - 4' Ht.	Cont.	N/A	
PV	31	Panicum virgatum	Switch Grass	1 gal.	Cont.	N/A	

ANY ALTERATION OF PLANS, SPECIFICATIONS, PLATS AND REPORTS BEARING THE SEAL OF A LICENSED PROFESSIONAL ENGINEER OR LICENSED LAND SURVEYOR IS A VIOLATION OF SECTION 7209 OF THE NEW YORK STATE EDUCATION LAW, EXCEPT AS PROVIDED FOR BY SECTION 7209, SUBSECTION 2.

No.	Revision	Date	By
1.	RESUBMIT TO VILLAGE HCZMC	07/01/2020	RAR

Previous Editions Obsolete

APPLICANT/OWNER:
MR. WILLIAM FEDYNA & ELISABETH FEDYNA
219 W 81ST STREET, APT. 9D
NEW YORK, NY, 10024

ARCHITECT:
ARCHI-TECTONICS
111 JOHN ST. #700
NEW YORK, NY 10038

JMC Planning, Engineering, Landscape Architecture & Land Surveying, PLLC
JMC Site Development Consultants, LLC
John Meyer Consulting, Inc.
120 BEDFORD ROAD • ARMONK, NY 10504
voice 914.273.5225 • fax 914.273.2102
www.jmcpllc.com

LANDSCAPING PLAN

RESIDENTIAL DEVELOPMENT
1165 GREACEN POINT ROAD
MAMARONECK, NY, 10543

Drawn: RAR	Approved: JAR
Scale: 1" = 20'	
Date: 06/28/2020	
Project No: 18100	
18100-LAND	L-100	LAY.scr
Drawing No: L-100	