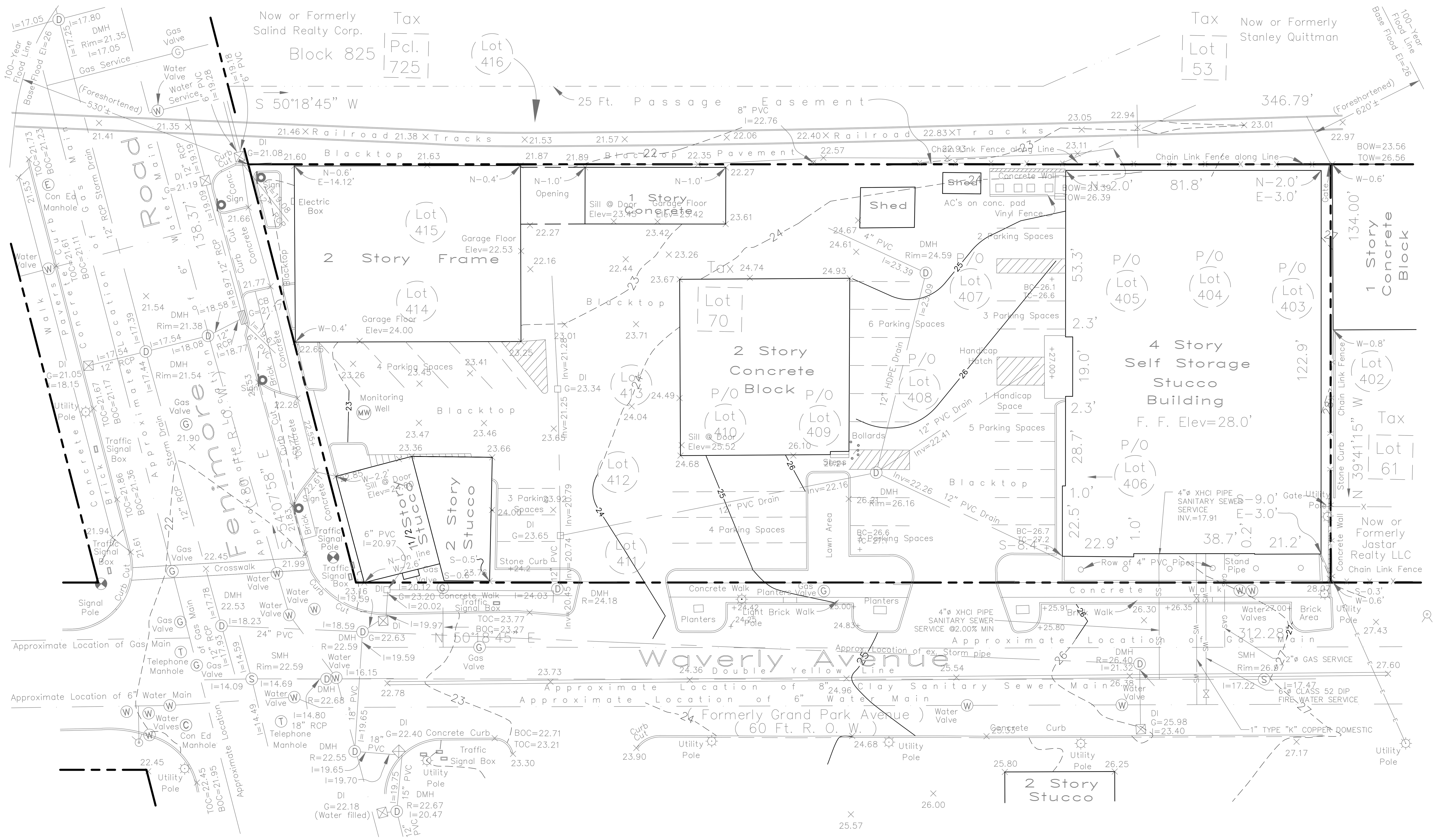

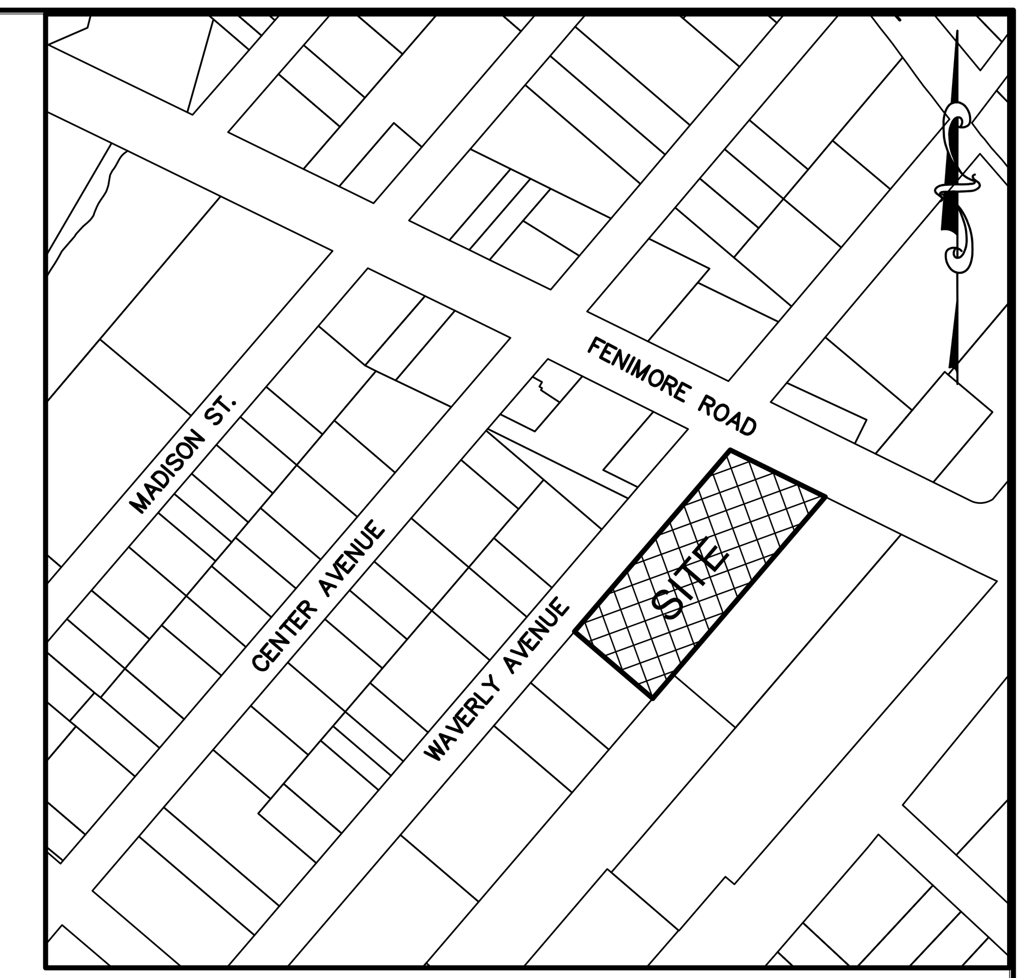

SITE LOCATION MAP
(SCALE: 1"=200')

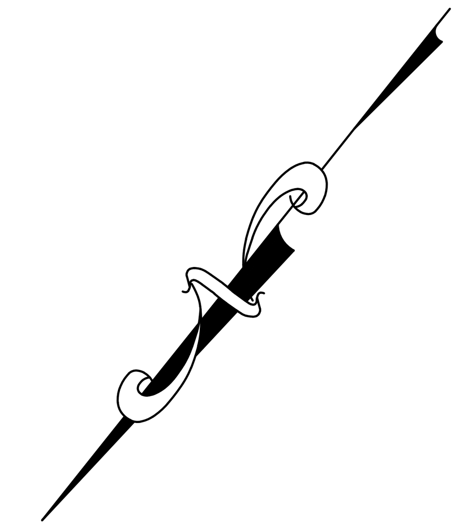

GRAPHIC SCALE

20 0 10 20 40 80

(IN FEET)
1 inch = 20 ft.

ANY ALTERATIONS OR REVISIONS OF THESE PLANS, UNLESS DONE BY OR UNDER THE DIRECTION OF THE NYS LICENSED AND REGISTERED ENGINEER THAT PREPARED THEM, IS A VIOLATION OF THE NYS EDUCATION LAW.

No.	Description	Date
1.	REVISED PER TOWN COMMENTS	9-27-18

Revisions

THIS PLAN NOT VALID FOR CONSTRUCTION WITHOUT ENGINEERS SEAL & SIGNATURE

PROJECT:

SELF STORAGE BUILDING ADDITION
560 FENIMORE ROAD
VILLAGE OF MAMARONECK
WESTCHESTER COUNTY – NEW YORK

EXISTING CONDITIONS MAP

HEC
HUDSON
ENGINEERING
&
CONSULTING, P.C.
45 Knollwood Road - Suite 201
Elmsford, New York 10523
T: 914-909-0420
F: 914-560-2086

© 2018

STATE OF NEW YORK * MICHAEL F. STEIN * No. 80637 * LICENSED PROFESSIONAL ENGINEER

Date:	2/8/18
Scale:	1" = 20'
Designed By:	D.C.
Checked By:	M.S.
Sheet:	1 / 7
Sheet No.	C-1

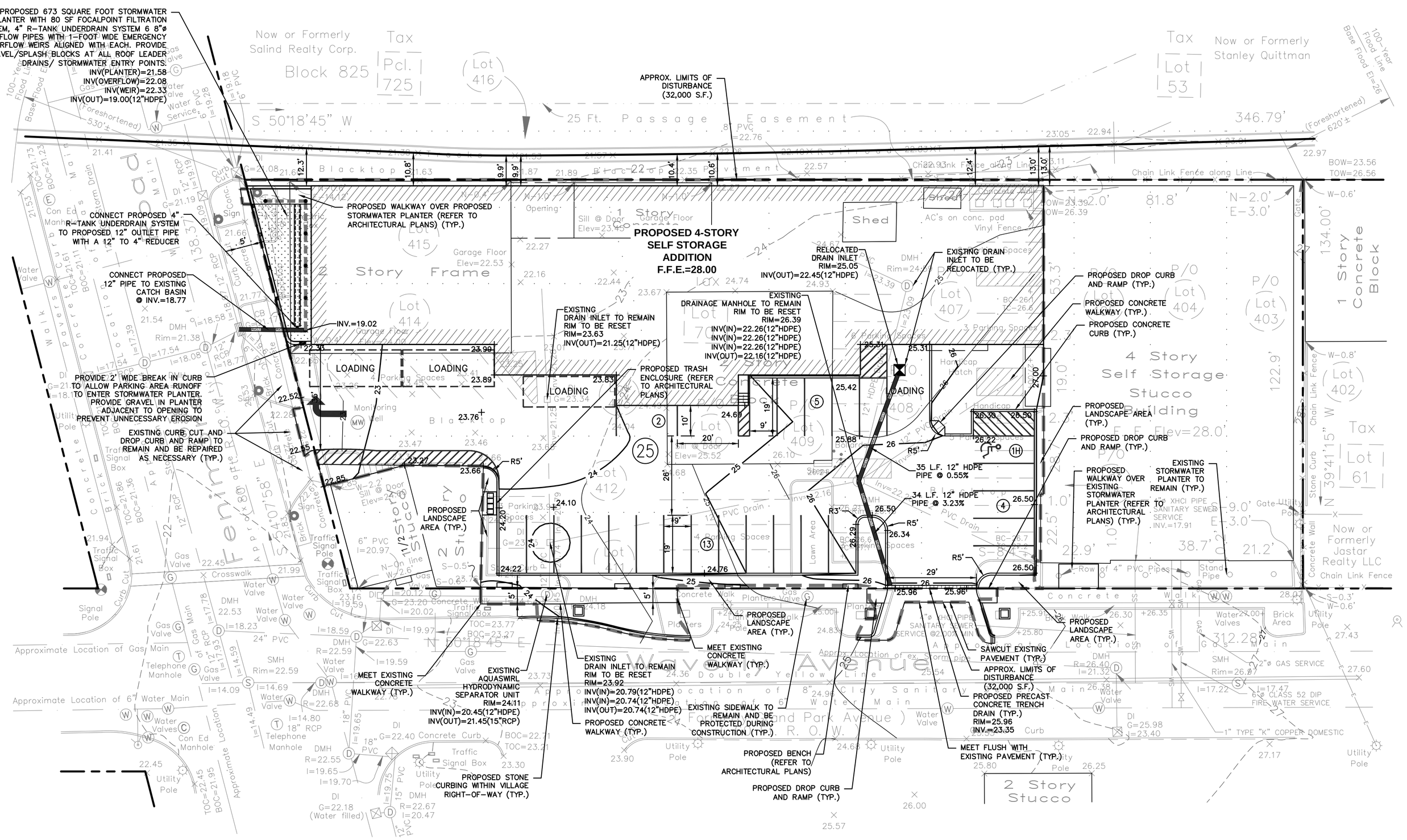

GENERAL NOTES:

1. THE ENGINEER SHALL NOT BE RESPONSIBLE FOR THE SUPERVISION OF THE CONSTRUCTION.
2. NO CHANGES SHALL BE MADE TO THESE PLANS EXCEPT AS PER NYS LAW CHAPTER 987.
3. ALL WORK AND MATERIALS SHALL COMPLY WITH ALL APPLICABLE CODES, INCLUDING BUT NOT LIMITED TO ACI, AISC, ZONING, AND THE NEW YORK STATE BUILDING CODE.
4. ALL CONDITIONS, LOCATIONS AND DIMENSIONS SHALL BE FIELD VERIFIED AND THE ENGINEER SHALL BE IMMEDIATELY NOTIFIED OF ANY DISCREPANCIES.
5. ALL CHANGES MADE TO THE PLANS SHALL BE APPROVED BY THE ENGINEER AND ANY SUCH CHANGES SHALL BE FILED AS AMENDMENTS TO THE ORIGINAL BUILDING PERMIT.
6. THE CONTRACTOR SHALL SUPERVISE AND DIRECT THE WORK USING HIS BEST SKILL AND ATTENTION. HE SHALL BE SOLELY RESPONSIBLE FOR ALL CONSTRUCTION MEANS, METHODS, TECHNIQUES, SEQUENCES AND PROCEDURES AND FOR COORDINATING ALL PORTIONS OF THE WORK UNDER THE CONTRACT.
7. THE CONTRACTOR SHALL BE RESPONSIBLE TO THE OWNER FOR THE ACTS AND OMISSIONS OF HIS EMPLOYEES, SUBCONTRACTORS AND THEIR AGENTS AND EMPLOYEES, AND OTHER PERSONS PERFORMING ANY OF THE WORK UNDER A CONTACT WITH THE CONTRACTOR.
8. SAFETY DURING CONSTRUCTION SHALL BE THE RESPONSIBILITY OF THE CONTRACTOR AND SHALL CONFORM TO ALL LOCAL, STATE AND FEDERAL AGENCIES IN EFFECT DURING THE PERIOD OF CONSTRUCTION.
9. THE CONTRACTOR AND HIS SUBCONTRACTORS SHALL MAKE APPLICATION TO RECEIVE ALL NECESSARY PERMITS TO PERFORM THE WORK UNDER CONTRACT. THE CONTRACTOR AND HIS SUBCONTRACTORS SHALL BE LICENSED TO DO ALL WORK AS REQUIRED BY THE LOCAL, COUNTY, AND STATE AGENCIES WHICH MAY HAVE JURISDICTION OVER THOSE TRADES, AND SHALL PRESENT THE OWNER WITH COPIES OF ALL LICENSES AND INSURANCE CERTIFICATES.
10. FINAL GRADING AROUND THE BUILDING AREA SHALL SLOPE AWAY FROM THE STRUCTURE.
11. ALL WRITTEN DIMENSIONS ON THE DRAWINGS SHALL TAKE PRECEDENCE OVER ANY SCALED DIMENSIONS.
12. ADJOINING PUBLIC AND PRIVATE PROPERTY SHALL BE PROTECTED FROM DAMAGE DURING CONSTRUCTION, REMODELING AND DEMOLITION WORK. PROTECTION MUST BE PROVIDED FOR FOOTINGS, FOUNDATIONS, PARTY WALLS, CHIMNEYS, SKYLIGHTS AND ROOFS. PROVISIONS SHALL BE MADE TO CONTROL WATER RUNOFF AND EROSION DURING CONSTRUCTION OR DEMOLITION ACTIVITIES. THE PERSON MAKING OR CAUSING AN EXCAVATION TO BE MADE SHALL PROVIDE WRITTEN NOTICE TO THE OWNERS OF ADJOINING BUILDINGS ADVISING THEM THAT THE EXCAVATION IS TO BE MADE AND THAT THE ADJOINING BUILDING SHOULD BE PROTECTED. SAID NOTIFICATION SHALL BE DELIVERED NOT LESS THAN 10 DAYS PRIOR TO THE SCHEDULED STARTING DATE OF THE EXCAVATION.
13. OWNER SHALL INSURE THAT THE INSURANCE PROVIDED BY THE CONTRACTOR HIRED TO PERFORM THE WORK SHALL BE ENDORSED TO NAME HUDSON ENGINEERING & CONSULTING, P.C., AND ANY DIRECTORS, OFFICERS, EMPLOYEES, SUBSIDIARIES, AND AFFILIATES, AS ADDITIONAL INSURED ON ALL POLICIES AND HOLD HARMLESS DOCUMENTS, AND SHALL STIPULATE THAT THIS INSURANCE IS PRIMARY, AND THAT ANY OTHER INSURANCE OR SELF-INSURANCE MAINTAINED BY HUDSON ENGINEERING & CONSULTING, P.C., SHALL BE EXCESS ONLY AND SHALL NOT BE CALLED UPON TO CONTRIBUTE WITH THIS INSURANCE. ISO ADDITIONAL INSURED ENDORSEMENT FORM NUMBER CG2010 1185 UNDER GL. COPIES OF THE INSURANCE POLICIES SHALL BE SUBMITTED TO AND HUDSON ENGINEERING & CONSULTING, P.C., FOR APPROVAL PRIOR TO THE SIGNING OF THE CONTRACT.
14. INDUSTRIAL CODE RULE 753: THE CONTRACTOR SHALL NOTIFY ALL UTILITY COMPANIES 72 HOURS PRIOR TO THE START OF HIS OPERATIONS AND SHALL COMPLY WITH ALL THE LATEST INDUSTRIAL CODE RULE 753 REGULATIONS.

LEGEND

PROPERTY LINE	
PROPOSED CONCRETE CURB	
PROPOSED BITUMINOUS CONCRETE PAVEMENT	
PROPOSED WALKWAY	
PROPOSED CONTOUR	26
PROPOSED SPOT GRADE	+26.25
PROPOSED STORM PIPE	
PROPOSED DRAIN INLET	
PROPOSED TRENCH DRAIN	
PROPOSED LIMIT OF DISTURBANCE	

NOTES:

1. ANY IMPORTED SOIL SHALL COMPLY WITH ALL FEDERAL, STATE, AND LOCAL REQUIREMENTS FOR QUALITY AND USE.
2. OFF-SITE DISPOSAL OF EXCESS CUT SHALL BE IN ACCORDANCE WITH ALL FEDERAL, STATE, AND LOCAL REQUIREMENTS.
3. UTILITIES TO ALL EXISTING BUILDINGS TO BE DEMOLISHED SHALL BE REMOVED, CUT AND AND CAPPED AT THE MAIN PER VILLAGE OF MAMARONECK STANDARDS.

Cut/Fill Summary

	Cut	Fill	Net
Totals	69.31 Cu. Yd.	127.91 Cu. Yd.	58.59 Cu. Yd.<Fill>

GRAPHIC SCALE

20 0 10 20 40 80

(IN FEET)
1 inch = 20 ft.

No.	Revisions	Date
1.	REVISED PER TOWN COMMENTS	9-27-18

THIS PLAN NOT VALID FOR CONSTRUCTION WITHOUT ENGINEER'S SEAL & SIGNATURE

PROJECT:

SELF STORAGE BUILDING ADDITION
560 FENIMORE ROAD
VILLAGE OF MAMARONECK
WESTCHESTER COUNTY – NEW YORK

STORMWATER MANAGEMENT PLAN

STATE OF NEW YORK · MICHAEL A. SIEGEL · LICENSED PROFESSIONAL ENGINEER · No. 80637

HEC

HUDSON ENGINEERING & CONSULTING, P.C.
45 Knollwood Road – Suite 201
Elmsford, New York 10523
T: 914-909-0420
F: 914-560-2086

© 2018

Date: 2/8/18
Scale: 1" = 20'
Designed By: D.C.
Checked By: M.S.
Sheet: 2 / 7
Sheet No. C-2

ANY ALTERATIONS OR REVISIONS OF THESE PLANS, UNLESS DONE BY OR UNDER THE DIRECTION OF THE NYS LICENSED AND REGISTERED ENGINEER THAT PREPARED THEM, IS A VIOLATION OF THE NYS EDUCATION LAW.

INSTALLATION & MAINTENANCE OF EROSION CONTROL:

CONSTRUCTION SCHEDULE
NOTIFY APPROPRIATE MUNICIPAL AGENCY HAVING JURISDICTION AT LEAST 5 DAYS PRIOR TO START.

EROSION CONTROL MEASURES
INSTALL ALL EROSION CONTROL MEASURES PRIOR TO START OF CONSTRUCTION. CALL FOR INSPECTION FROM THE APPROPRIATE MUNICIPAL AGENCY HAVING JURISDICTION AT LEAST 2 DAYS PRIOR TO INSTALLATION.

INSPECTION BY MUNICIPALITY
MAINTENANCE (TO BE PERFORMED DURING ALL PHASES OF CONSTRUCTION)

AFTER ANY RAIN CAUSING RUNOFF, CONTRACTOR TO INSPECT HAYBALES, ETC. AND REMOVE ANY EXCESSIVE SEDIMENT AND INSPECT STOCKPILES AND CORRECT ANY PROBLEMS WITH SEED ESTABLISHMENT.
INSPECTIONS SHALL BE DOCUMENTED IN WRITING AND SUBMITTED TO THE APPROPRIATE MUNICIPAL AGENCY HAVING JURISDICTION.

INSPECTION BY MUNICIPALITY – FINAL GRADING
REMOVE UNNEEDED SUBGRADE FROM SITE.
CALL FOR INSPECTION FROM THE APPROPRIATE MUNICIPAL AGENCY HAVING JURISDICTION AT LEAST 2 DAYS PRIOR TO FINISH.

INSPECTION BY MUNICIPALITY – LANDSCAPING

SPREAD TOPSOIL EVENLY OVER AREAS TO BE SEEDED. HAND RAKE LEVEL. BROADCAST 1.25 LB. BAG OF JONATHAN GREEN "FASTGROW" MIX OR EQUAL OVER AREA TO BE SEEDED. APPLY STRAW MULCH AND WATER WITHIN 2 DAYS OF COMPLETION OF TOPSOILING. CALL FOR INSPECTION FROM THE APPROPRIATE MUNICIPAL AGENCY HAVING JURISDICTION AT LEAST 2 DAYS PRIOR TO FINISH.

INSPECTION BY MUNICIPALITY – FINAL LANDSCAPING

GRASS ESTABLISHED.
CALL FOR INSPECTION FROM THE APPROPRIATE MUNICIPAL AGENCY HAVING JURISDICTION AT LEAST 2 DAYS PRIOR TO FINISH.

INSPECTION BY MUNICIPALITY – FINAL INSPECTION

ALL EROSION CONTROL MEASURES REMOVED AND GRASS ESTABLISHED.
CALL FOR INSPECTION FROM THE APPROPRIATE MUNICIPAL AGENCY HAVING JURISDICTION AT LEAST 2 DAYS PRIOR TO FINISH.

LEGEND

- TEMPORARY INLET PROTECTION (IP)
- TEMPORARY SILT FENCE (SF)
- TEMPORARY CONSTRUCTION FENCE (CF)
- TEMPORARY SOIL STOCKPILE AREA (SS)
- STABILIZED CONSTRUCTION ENTRANCE
- PROPOSED LIMIT OF DISTURBANCE

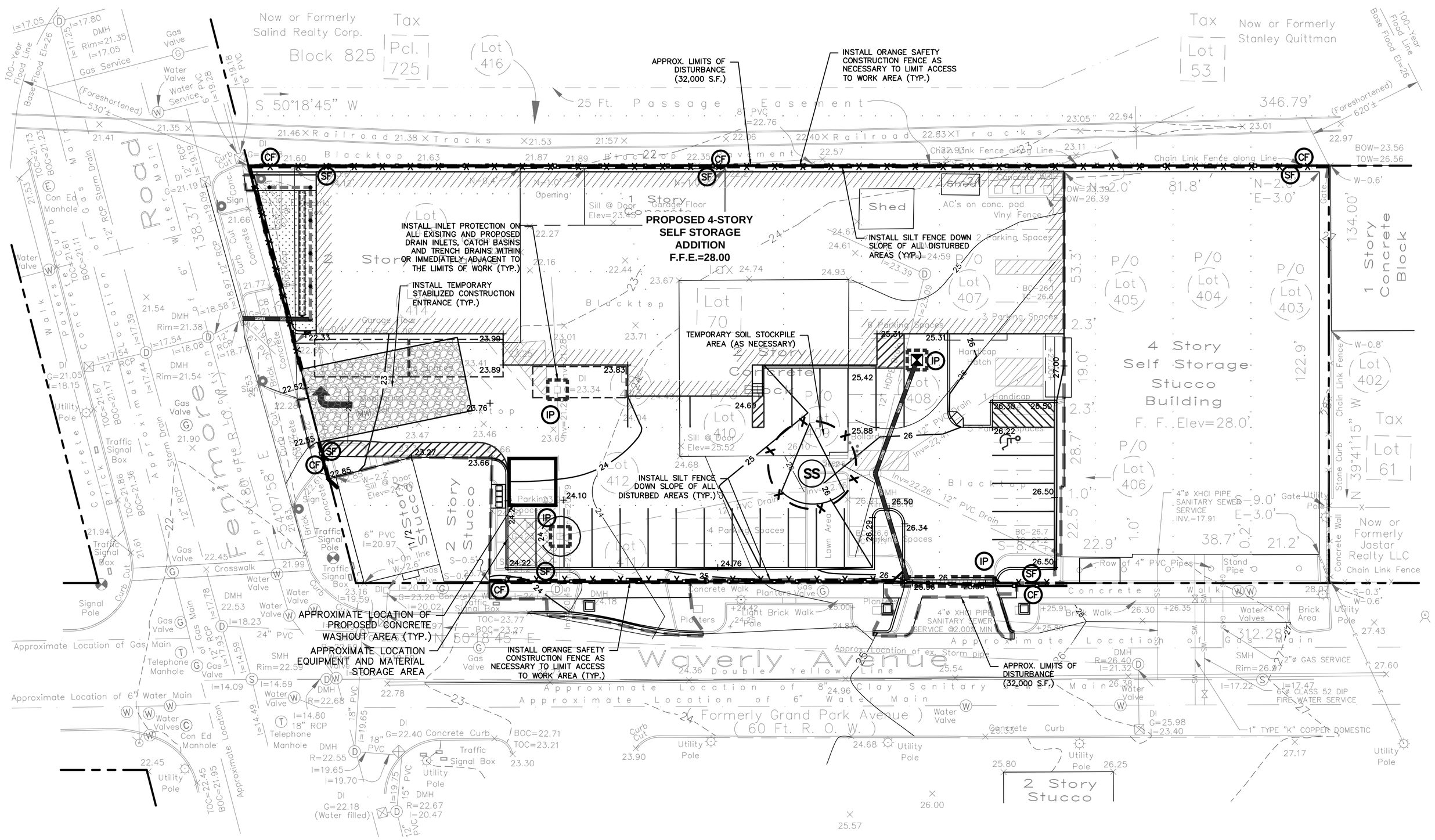

GRAPHIC SCALE
20 0 10 20 40 80
(IN FEET)
1 inch = 20 ft.

ANY ALTERATIONS OR REVISIONS OF THESE PLANS, UNLESS DONE BY OR UNDER THE DIRECTION OF THE NYS LICENSED AND REGISTERED ENGINEER THAT PREPARED THEM, IS A VIOLATION OF THE NYS EDUCATION LAW.

No.	Revisions	Date
1.	REVISED PER TOWN COMMENTS	9-27-18

THIS PLAN NOT VALID FOR CONSTRUCTION WITHOUT ENGINEER'S SEAL & SIGNATURE

PROJECT:
SELF STORAGE BUILDING ADDITION
560 FENIMORE ROAD
VILLAGE OF MAMARONECK
WESTCHESTER COUNTY – NEW YORK

EROSION & SEDIMENT CONTROL PLAN

STATE OF NEW YORK · MICHAEL F. SHEIN · No. 80637 · LICENSED PROFESSIONAL ENGINEER

HEC
HUDSON ENGINEERING & CONSULTING, P.C.
45 Knollwood Road - Suite 201
Elmsford, New York 10523
T: 914-909-0420
F: 914-560-2086

© 2018

Date: 2/8/18 Sheet: 3 / 7
Scale: 1" = 20'
Designed By: D.C.
Checked By: M.S.
Sheet No. C-3

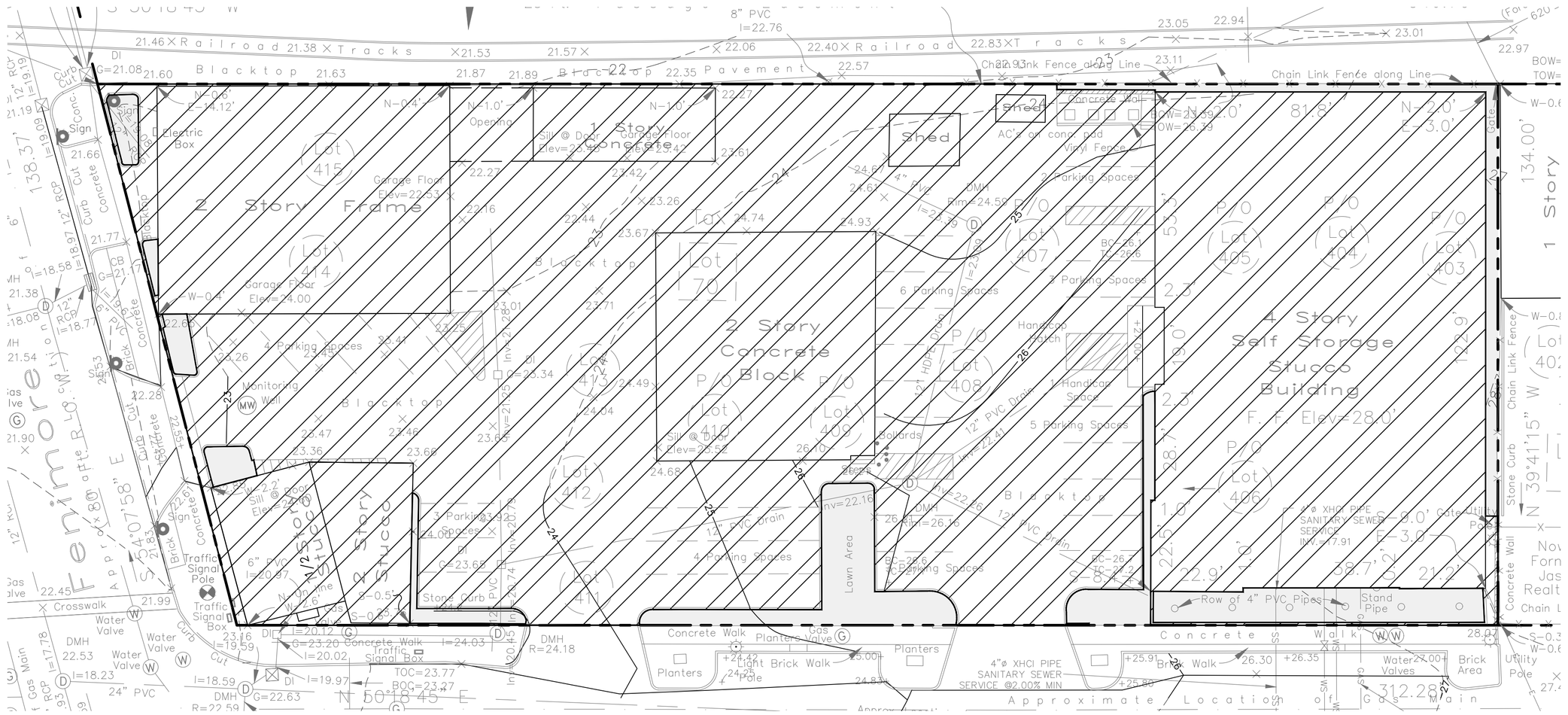

EXISTING SITE COVERAGE
SCALE: 1"=20'

Existing Site Coverage

Impervious:	41,390 SF
Pervious:	2,766 SF

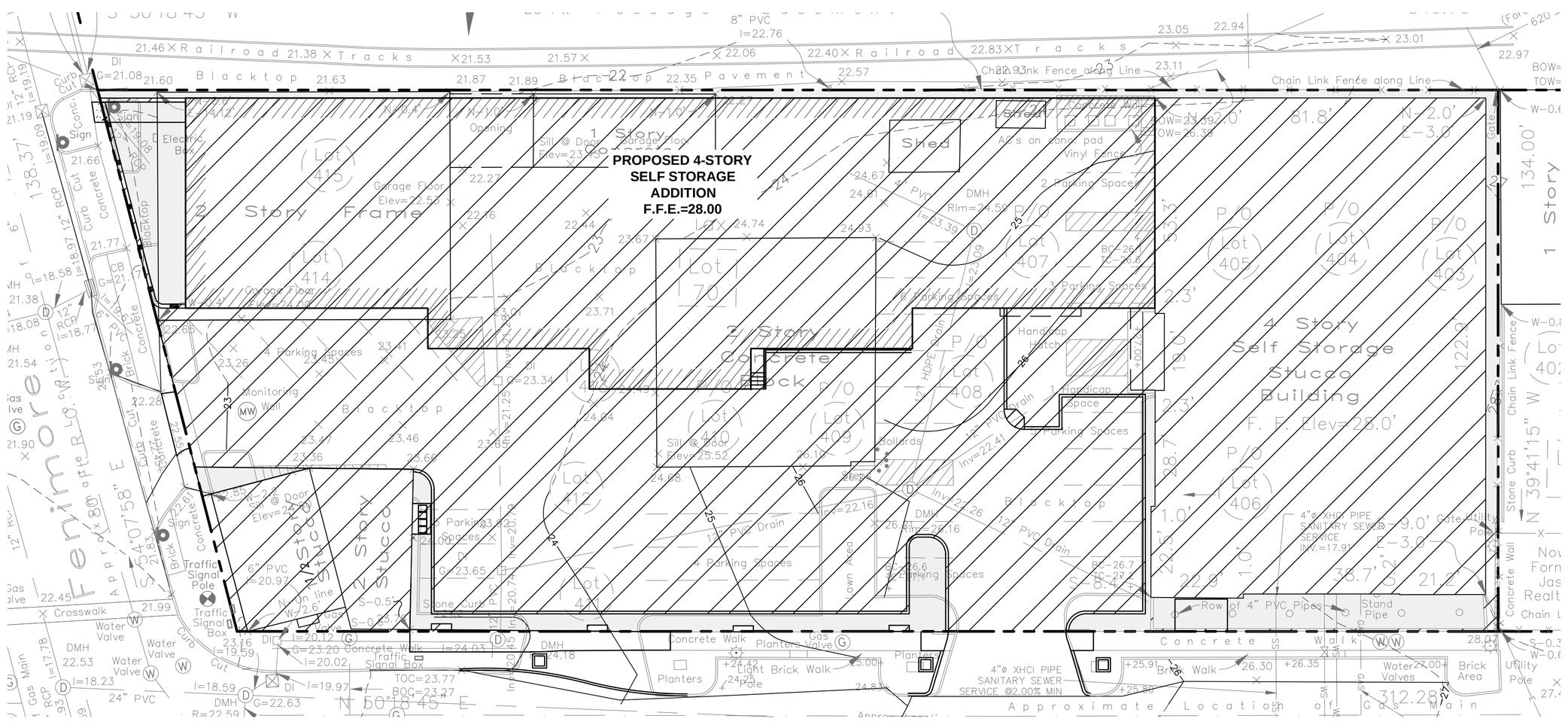

PROPOSED SITE COVERAGE
SCALE: 1"=20'

Proposed Site Coverage

Impervious:	40,675 SF
Pervious:	3,481 SF

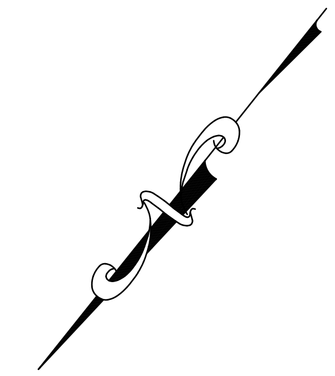

LEGEND

IMPERVIOUS COVER

PERVIOUS COVER

GRAPHIC SCALE

30 0 15 30 60 120

(IN FEET)
1 inch = 30 ft.

ANY ALTERATIONS OR REVISIONS OF THESE PLANS, UNLESS DONE BY OR UNDER THE DIRECTION OF THE NYS LICENSED AND REGISTERED ENGINEER THAT PREPARED THEM, IS A VIOLATION OF THE NYS EDUCATION LAW.

No.	Description	Date
1.	REVISED PER TOWN COMMENTS	9-27-18

Revisions

THIS PLAN NOT VALID FOR CONSTRUCTION WITHOUT ENGINEERS SEAL & SIGNATURE

PROJECT:

SELF STORAGE BUILDING ADDITION
560 FENIMORE ROAD
VILLAGE OF MAMARONECK
WESTCHESTER COUNTY – NEW YORK

SITE COVERAGE PLAN

STATE OF NEW YORK · RICHARD A. STEIN · No. 80637 · LICENSED PROFESSIONAL ENGINEER

HEC

HUDSON ENGINEERING & CONSULTING, P.C.
45 Knollwood Road – Suite 201
Elmsford, New York 10523
T: 914-909-0420
F: 914-560-2086

© 2018

Date:	2/8/18
Scale:	1" = 20'
Designed By:	D.C.
Checked By:	M.S.
Sheet No.	C-4
Sheet:	4 / 7

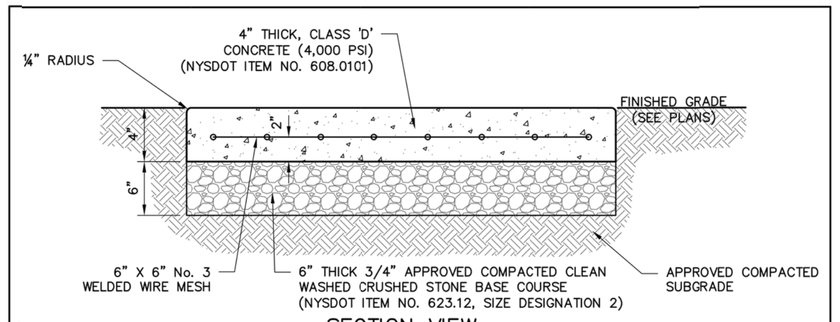

SECTION VIEW

NOTES:

1. WHEN SIDEWALK ABUTS A ROADWAY, CURB AND SIDEWALK SHALL BE MONOLITHICALLY CONSTRUCTED. REFER TO VILLAGE STANDARD MONOLITHIC CURB AND SIDEWALK CONSTRUCTION DETAIL.
2. UNLESS OTHERWISE NOTED, PORTLAND CEMENT CONCRETE SIDEWALKS SHALL MEET THE SPECIFICATIONS OUTLINED IN SECTION 608 AND SUBSECTION 700 OF THE NEW YORK STATE DEPARTMENT OF TRANSPORTATION STANDARD SPECIFICATIONS, DATED JANUARY 9, 2014 WITH LATEST REVISIONS.
3. THE GENERAL CONSTRUCTION DETAILS FOR MANUFACTURING AND TRANSPORTING CONCRETE SHALL MEET THE REQUIREMENTS OF SECTION 501, PORTLAND CEMENT CONCRETE– GENERAL.
4. WELDED WIRE FABRIC REINFORCEMENT SHALL BE MADE OF W2.9 OR W3 WIRE AT 6 INCH CENTERS TRANSVERSELY CONVENTIONALLY FORMED CONCRETE SHALL MEET THE REQUIREMENTS FOR CLASS D IN ACCORDANCE WITH SECTION 501 "PORTLAND CEMENT CONCRETE––GENERAL." CONCRETE SHALL CONTAIN A WATER–REDUCING ADMIXTURE MEETING THE REQUIREMENTS OF §711–08 IN SUCH A QUANTITY AS TO PROVIDE A MINIMUM 10% REDUCTION OF THE DESIGN WATER CONTENT BY USING A NORMAL RANGEWATER–REDUCER. WWF SHALL BE MANUFACTURED IN SHEETS AND PLACED WITH IN CONCRETE BY CHAIRING.
5. REINFORCING SHALL NOT EXTEND THROUGH EXPANSION JOINTS.
6. INSTALL A PREMOULDED RESILIENT JOINT FILLER, §705–07, AT ALL JOINTS BETWEEN SIDEWALK AND CURB, PAVEMENT, BUILDING, ETC. THE PREMOULDED RESILIENT JOINT FILLER SHALL CONFORM TO THE REQUIREMENTS OF ASTM D1751.
7. THE EXPANSION JOINTS SHALL BE LOCATED AT ALL IMMOVABLE OBJECTS (BRIDGE SUBSTRUCTURES, ETC.), WHERE SHOWN ON THE PLANS, AND/OR AS DIRECTED BY THE ENGINEER. EXPANSION JOINTS SHALL NOT BE REQUIRED AT 20 FOOT INTERVALS.
8. PREMOULDED RESILIENT JOINT FILLER (§705–07). USE 3/8 – 5/8 INCH THICK FILLER IN TRANSVERSE EXPANSION JOINT ASSEMBLIES ONLY. INCLUDE A ONE–PIECEPREMOULDED RESILIENT JOINT FILLER IN THE ASSEMBLY THAT EXTENDS COMPLETELY ACROSS THE SLAB WIDTH. THE JOINT FILLER MUST EITHER EQUAL THE FULL DEPTH OF THE SLAB, OR EXTEND FROM THE BOTTOM OF THE SLAB TO WITHIN 1 1/2 – 2 INCHES OF THE TOP OF THE SLAB WITH A FINISHING CAP THAT EXTENDS TO THE TOP OF THE SLAB.
9. UNLESS OTHERWISE SPECIFIED IN THE CONTRACT DOCUMENTS, THE CONCRETE SURFACE SHALL BE SCORED AND TOOLED AT INTERVALS OF 5 FEET. SCORE THE CONCRETE A MINIMUM 1/8 INCH TO A MAXIMUM 1/4 INCH IN WIDTH AND TO A MINIMUM DEPTH OF ONE–THIRD THE TOTAL THICKNESS.
10. 3 FOOT WIDE SIDEWALKS SHALL RECEIVE CONTRACTION JOINTS EVERY 4 FEET. 4 AND 5 FOOT WIDE SIDEWALKS SHALL RECEIVE CONTRACTION JOINTS EQUAL TO THE WIDTH OF THE SIDEWALK. SIDEWALKS MAY BE CONVENTIONALLY FORMED OR MACHINE FORMED.
11. ONLY MAGNESIUM FLOATS AND TROWELS ARE ALLOWED. THE USE OF ALUMINUM OR STEEL FINISHING TROWELS AND TOOLS IS PROHIBITED. THE CONCRETE SHALL BE FINISHED TO PRODUCE A SMOOTH SURFACE AND THEN LIGHTLY BROOMED TO A UNIFORM TEXTURE. THE EDGES AND SCORED JOINTS OF ALL SIDEWALK SLABS SHALL BE TOOLED WITH AN EDGING TOOL HAVING A 1/4 INCH RADIUS.
12. ALL WORK SHALL BE IN ACCORDANCE WITH NYSDOT SPECIFICATIONS AND IN REASONABLY CLOSE CONFORMITY WITH THE LINES AND GRADES SHOWN ON THE PLANS OR ESTABLISHED BY THE ENGINEER.
13. SIDEWALK SHALL BE PAID UNDER NYSDOT ITEM NO. 608.0101. CRUSHED STONE SHALL BE PAID UNDER NYSDOT ITEM NO. 623.12.

VILLAGE OF MAMARONECK STANDARD CONSTRUCTION DETAILS	CAST–IN–PLACE CONCRETE SIDEWALK	VILLAGE OF MAMARONECK, VILLAGE MUNICIPAL BUILDING, 169 MT. PLEASANT AVENUE (3RD FLOOR), WESTCHESTER COUNTY, VILLAGE OF MAMARONECK, NY 10543, PHONE: (914) 777–7731, FAX: (914) 777–7792	PROJECT: DETAILS; SCALE: NOT TO SCALE; DATE: 03/13/2014
PREPARED IN THE OFFICE OF THE VILLAGE ENGINEER	DESIGNED BY: ARC, PE; CHECKED BY: ARC, PE; DRAWN BY: ARC, PE; VOM PCC Sidewalk.dwg		SD-5D

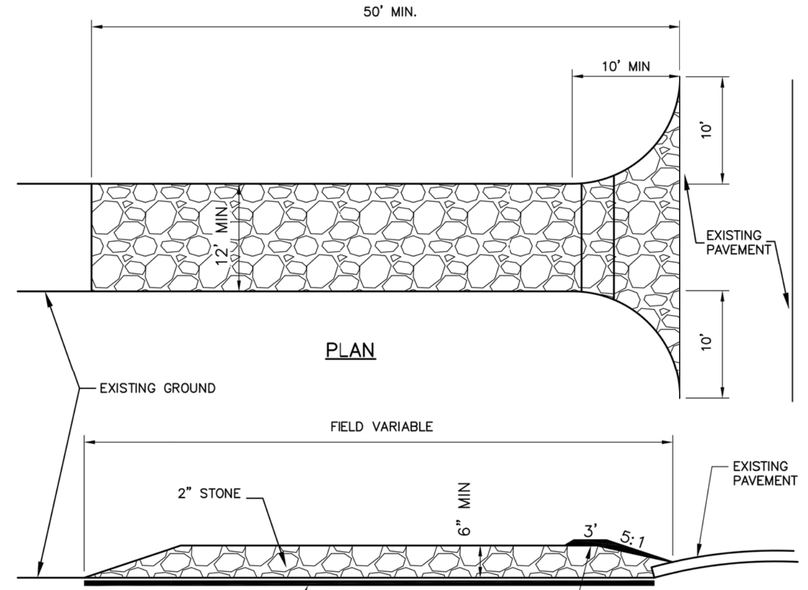

PROFILE

CONSTRUCTION SPECIFICATIONS:

1. USE 2" DIAMETER STONE OR RECLAIMED/RECYCLED CONCRETE EQUIVALENT.
2. RECOMMENDED LENGTH GREATER THAN 50 FEET WHERE PRACTICAL.
3. THICKNESS NOT LESS THAN 6 INCHES.
4. 10 FOOT MINIMUM WIDTH, BUT NOT LESS THAN FULL WIDTH AT POINTS WHERE INGRESS AND EGRESS OCCUR.
5. FILTER CLOTH SHALL BE PLACED OVER THE ENTIRE AREA PRIOR TO PLACING OF STONE.

CONSTRUCTION SPECIFICATIONS:

6. ALL SURFACE WATER FLOWING OR DIVERTED TOWARD CONSTRUCTION ENTRANCES SHALL BE PIPED ACROSS THE ENTRANCE. IF PIPING IS IMPRACTICAL, A MOUNTABLE BERM WILL BE PERMITTED.
7. ENTRANCE SHALL BE MAINTAINED IN A CONDITION THAT WILL PREVENT TRACKING OR FLOWING OF SEDIMENT ONTO PUBLIC RIGHTS–OF–WAY. THIS MAY REQUIRE PERIODIC TOP DRESSING WITH ADDITIONAL STONE AS CONDITIONS DEMAND, AND REPAIR AND/OR CLEANOUT OF ANY MEASURES USED TO TRAP SEDIMENT. ALL SEDIMENT SPILLED, DROPPED, WASHED, OR TRACKED ONTO PUBLIC RIGHTS–OF–WAY MUST BE REMOVED IMMEDIATELY.
8. PERIODIC INSPECTION AND NEEDED MAINTENANCE SHALL BE PROVIDED BY THE CONTRACTOR.
9. REMOVE STABILIZED CONSTRUCTION ENTRANCE PRIOR TO PLACEMENT OF BITUMINOUS CONCRETE PAVEMENT.

VILLAGE OF MAMARONECK STANDARD CONSTRUCTION DETAILS	STABILIZED CONSTRUCTION ENTRANCE	VILLAGE OF MAMARONECK, VILLAGE MUNICIPAL BUILDING, 169 MT. PLEASANT AVENUE (3RD FLOOR), WESTCHESTER COUNTY, VILLAGE OF MAMARONECK, NY 10543, PHONE: (914) 777–7731, FAX: (914) 777–7792	PROJECT: DETAILS; SCALE: NOT TO SCALE; DATE: 03/13/2014
PREPARED IN THE OFFICE OF THE VILLAGE ENGINEER	DESIGNED BY: ARC, PE; CHECKED BY: ARC, PE; DRAWN BY: ARC, PE; VOM Stabilized Construction Entr		SD-1C

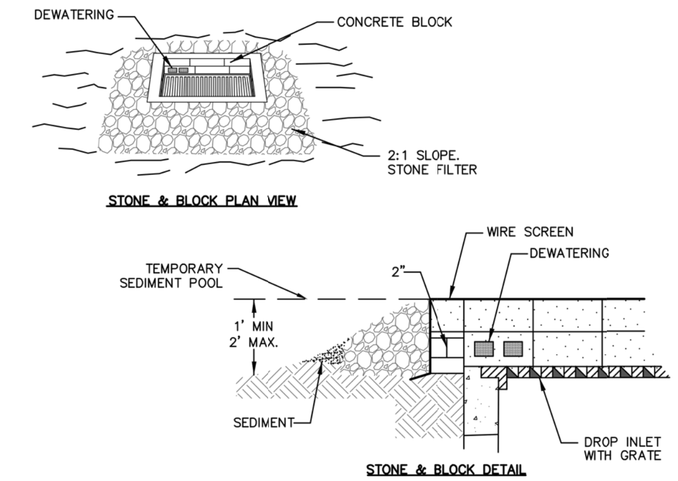

STONE & BLOCK PLAN VIEW

STONE & BLOCK DETAIL

'DOUGHNUT' DETAIL

NOTES:

1. LAY ONE BLOCK ON EACH SIDE OF THE STRUCTURE ON ITS SIDE FOR DEWATERING. FOUNDATION SHALL BE 2 INCHES MINIMUM BELOW REST OF INLET AND BLOCKS SHALL BE PLACED AGAINST INLET FOR SUPPORT.
2. HARDWARE CLOTH OR ½" WIRE MESH SHALL BE PLACED OVER BLOCK OPENINGS TO SUPPORT STONE.
3. USE CLEAN STONE OR GRAVEL ½ TO ¾ INCH IN DIAMETER PLACED 2 INCHES BELOW TOP OF THE BLOCK ON A 2:1 SLOPE OR FLATTER.
4. FOR STONE STRUCTURES ONLY. A 1 FOOT THICK LAYER OF THE FILTER STONE WILL BE PLACED AGAINST THE 3 INCH STONE AS SHOWN ON THE DRAWINGS.

MAXIMUM DRAINAGE AREA 1 ACRE

VILLAGE OF MAMARONECK STANDARD CONSTRUCTION DETAILS	STONE AND BLOCK DRAIN INLET PROTECTION	VILLAGE OF MAMARONECK, VILLAGE MUNICIPAL BUILDING, 169 MT. PLEASANT AVENUE (3RD FLOOR), WESTCHESTER COUNTY, VILLAGE OF MAMARONECK, NY 10543, PHONE: (914) 777–7731, FAX: (914) 777–7792	PROJECT: DETAILS; SCALE: NOT TO SCALE; DATE: 03/13/2014
PREPARED IN THE OFFICE OF THE VILLAGE ENGINEER	DESIGNED BY: ARC, PE; CHECKED BY: ARC, PE; DRAWN BY: ARC, PE; VOM Stone & Block Inlet Protecti		SD-1G

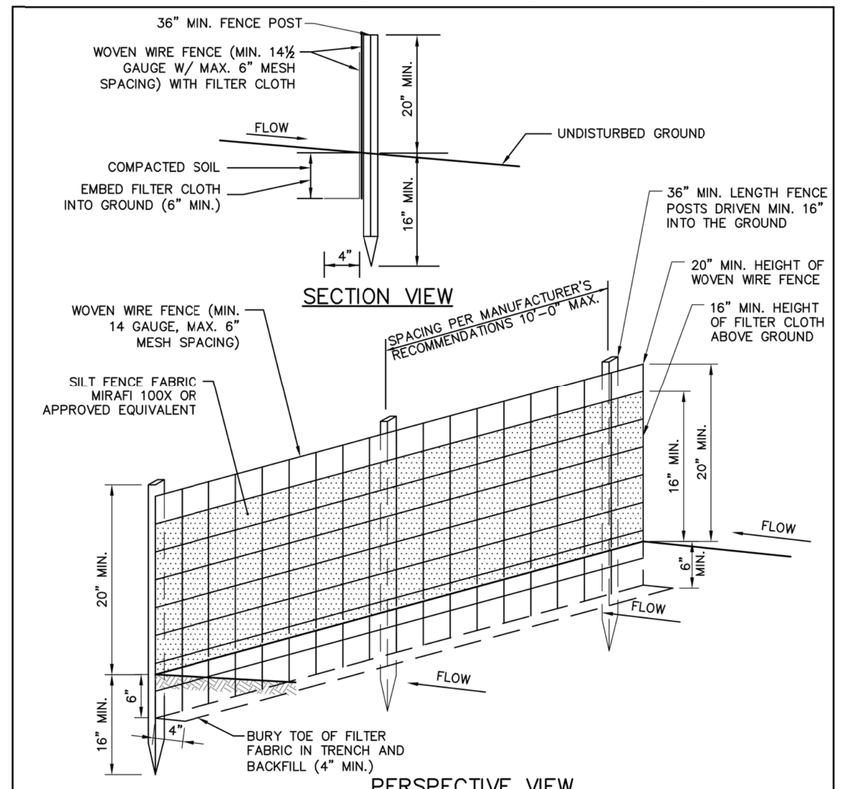

SECTION VIEW

PERSPECTIVE VIEW

NOTES:

1. WOVEN WIRE FENCE SHALL BE FASTENED SECURELY TO FENCE POSTS WITH WIRE TIES OR STAPLES. POSTS SHALL BE STEEL, EITHER 'T' OR 'U' TYPE OR HARDWOOD.
2. FILTER CLOTH TO BE FASTENED SECURELY TO WOVEN WIRE FENCE WITH TIES SPACED EVERY 24" AT TOP AND MID SECTION. FENCE SHALL BE WOVEN WIRE, 6" MAXIMUM MESH OPENING.
3. WHEN TWO SECTIONS OF FILTER CLOTH ADJOIN EACH OTHER, THEY SHALL BE OVERLAPPED BY SIX INCHES AND FOLDED. FILTER CLOTH SHALL BE EITHER FILTER X, MIRAFI 100X, STABLINKA T140N, OR APPROVED EQUIVALENT.
4. PREFABRICATED UNITS SHALL BE GEOFAB, ENVIROFENCE, OR APPROVED EQUIVALENT.
5. MAINTENANCE SHALL BE PERFORMED AS NEEDED AND MATERIAL REMOVED AND REPLACED WHEN "BULGES" DEVELOP IN THE SILT FENCE.
6. INSTALL FABRIC ON UPHILL SIDE OF SUPPORT POSTS.
7. SILT FENCE SHALL NOT BE USED IN DRAINAGE WAYS.

VILLAGE OF MAMARONECK STANDARD CONSTRUCTION DETAILS	SILT FENCE	VILLAGE OF MAMARONECK, VILLAGE MUNICIPAL BUILDING, 169 MT. PLEASANT AVENUE (3RD FLOOR), WESTCHESTER COUNTY, VILLAGE OF MAMARONECK, NY 10543, PHONE: (914) 777–7731, FAX: (914) 777–7792	PROJECT: DETAILS; SCALE: NOT TO SCALE; DATE: 03/13/2014
PREPARED IN THE OFFICE OF THE VILLAGE ENGINEER	DESIGNED BY: ARC, PE; CHECKED BY: ARC, PE; DRAWN BY: ARC, PE; VOM Silt Fence.dwg		SD-1A

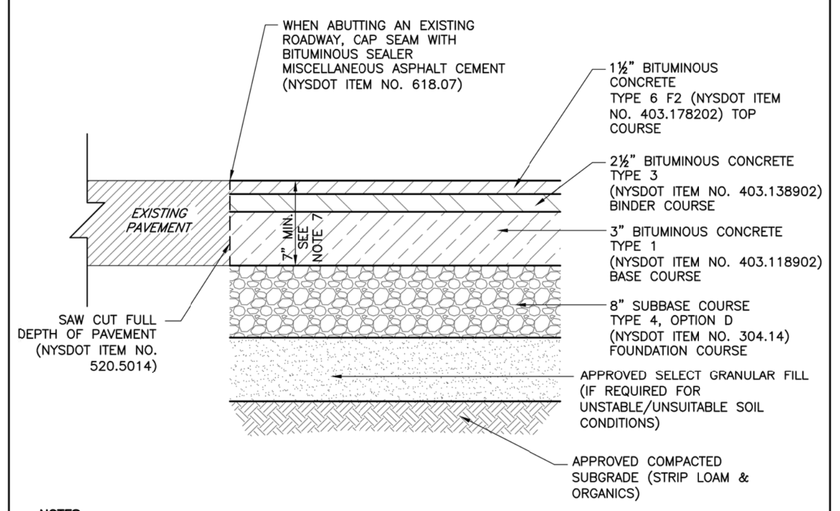

NOTES:

1. UNLESS OTHERWISE NOTED, BITUMINOUS CONCRETE SHALL MEET THE SPECIFICATIONS OUTLINED IN SECTION 403 OF THE NEW YORK STATE DEPARTMENT OF TRANSPORTATION STANDARD SPECIFICATIONS, DATED MAY 1, 2008 WITH LATEST REVISIONS. NOTE, THIS SECTION IS NO LONGER INCLUDED IN THE NYSDOT STANDARD SPECIFICATIONS.
2. UNLESS OTHERWISE NOTED, SUBBASE COURSE SHALL MEET THE SPECIFICATIONS OUTLINED IN SECTION 300 OF THE NEW YORK STATE DEPARTMENT OF TRANSPORTATION STANDARD SPECIFICATIONS, DATED MAY 1, 2008 WITH LATEST REVISIONS.
3. DETAIL DEPICTS COMPACTED PAVEMENT THICKNESS.
4. THIS DETAIL SHALL BE COORDINATED WITH THE VILLAGE STANDARD PIPE TRENCH AND ASPHALT PAVEMENT REPLACEMENT CONSTRUCTION DETAIL AND ALL OTHER PERTINENT VILLAGE STANDARD CONSTRUCTION DETAILS.
5. THIS ASPHALT CONCRETE PAVEMENT SECTION APPLIES ONLY TO LOCAL (i.e. VILLAGE) ROADS. PAVEMENT REPLACEMENT, REHABILITATION, CONSTRUCTION, ETC. FOR COUNTY AND STATE ROADWAYS SHALL BE IN ACCORDANCE WITH THE STANDARDS AND SPECIFICATIONS OF THE AGENCY HAVING JURISDICTION.
6. IF 403 HOT MIX ASPHALT (HMA) ITEM NUMBERS ARE UNAVAILABLE FROM THE ASPHALT PLANT, NYSDOT SUPERPAVE HMA 70 OR 80 SERIES COMPACTION SHALL BE SUBSTITUTED UPON REVIEW AND APPROVAL BY THE VILLAGE ENGINEER.
7. HOT MIX ASPHALT (HMA) PAVEMENT SHALL BE 7" MIN. THICK, OR MATCH EXISTING HMA PAVEMENT THICKNESS, WHICHEVER IS GREATER. IF EXISTING HMA PAVEMENT IS GREATER THAN 7", THE HMA DIFFERENCE SHALL CONSIST OF HMA BASE COURSE (OR BINDER COURSE FOR SMALL QUANTITIES)
8. THE VILLAGE ENGINEER RESERVES THE RIGHT TO MODIFY (e.g. INCREASE THICKNESS) THE PAVEMENT SECTION DUE TO SITE CONDITIONS (e.g. UNSUITABLE/UNSTABLE SUBGRADE, HIGH GROUNDWATER, ETC.).

VILLAGE OF MAMARONECK STANDARD CONSTRUCTION DETAILS	ASPHALT CONCRETE PAVEMENT (WITHIN RIGHT–OF–WAY)	VILLAGE OF MAMARONECK, VILLAGE MUNICIPAL BUILDING, 169 MT. PLEASANT AVENUE (3RD FLOOR), WESTCHESTER COUNTY, VILLAGE OF MAMARONECK, NY 10543, PHONE: (914) 777–7731, FAX: (914) 777–7792	PROJECT: DETAILS; SCALE: NOT TO SCALE; DATE: 03/13/2014; REV: 09/23/2014
PREPARED IN THE OFFICE OF THE VILLAGE ENGINEER	DESIGNED BY: ARC, PE; CHECKED BY: ARC, PE; DRAWN BY: ARC, PE; VOM Roadway Pavement Section		SD-6A

NOTES:

1. GRANITE CURB TO BE SPLIT FACE, SAWN TOP, EQUAL TO TYPE V4x16 FOR STRAIGHT CURB AND TYPE V5x16 FOR RADIUS CURB AS MANUFACTURED BY EITHER NORTH CAROLINA GRANITE, WILLIAMS STONE OR GENEVA GRANITE. JOINT OPTION SHALL BE STANDARD.
2. MINIMUM LENGTH OF STRAIGHT CURB SHALL BE 4'–0" AND RADIUS CURB SHALL BE 2'–0".
3. 1/4" ROUND OR "BUZZED EDGE" ON FRONT ARRIS LINE - COLOR GRAY.

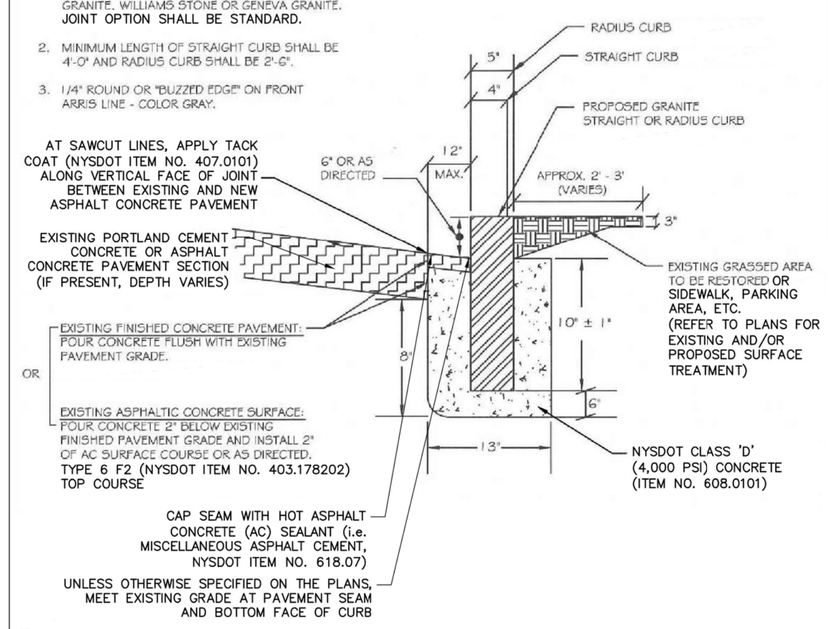

NOTES:

1. UNLESS OTHERWISE NOTED, GRANITE CURB AND PORTLAND CEMENT CONCRETE CRADLE SHALL MEET THE SPECIFICATIONS OUTLINED IN SECTION 501, 609 AND SUBSECTION 700 OF THE NEW YORK STATE DEPARTMENT OF TRANSPORTATION STANDARD SPECIFICATIONS, DATED JANUARY 9, 2014 WITH LATEST REVISIONS.
2. CURB SHALL CONFORM TO NYSDOT ITEM NO. 609.0201.
3. THE GENERAL CONSTRUCTION DETAILS FOR MANUFACTURING AND TRANSPORTING CONCRETE SHALL MEET THE REQUIREMENTS OF SECTION 501, PORTLAND CEMENT CONCRETE– GENERAL.
4. THE VERTICAL FACE OF THE COLD BUTT JOINT BETWEEN EXISTING AND PROPOSED PAVEMENT SHALL BE SEALED WITH TACK COAT AND THE SEAM SHALL BE SEALED WITH HOT AC SEALANT AS SHOWN ABOVE.

VILLAGE OF MAMARONECK STANDARD CONSTRUCTION DETAILS	GRANITE CURB	VILLAGE OF MAMARONECK, VILLAGE MUNICIPAL BUILDING, 169 MT. PLEASANT AVENUE (3RD FLOOR), WESTCHESTER COUNTY, VILLAGE OF MAMARONECK, NY 10543, PHONE: (914) 777–7731, FAX: (914) 777–7792	PROJECT: DETAILS; SCALE: NOT TO SCALE; DATE: 03/13/2014
PREPARED IN THE OFFICE OF THE VILLAGE ENGINEER	DESIGNED BY: ARC, PE; CHECKED BY: ARC, PE; DRAWN BY: ARC, PE; VOM Granite Curb.dwg		SD-5B

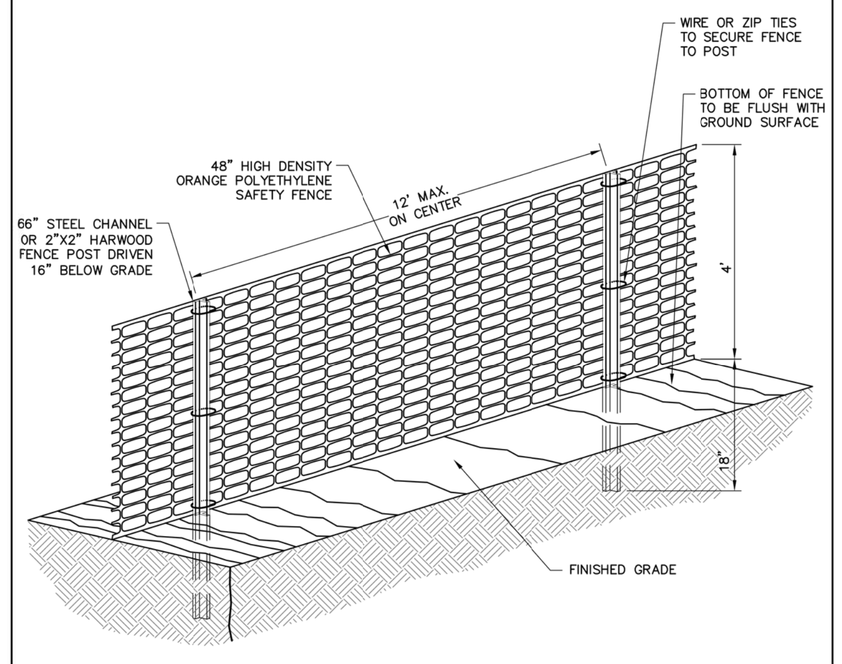

NOTES:

1. MAINTAIN TENSION ACROSS FULL HEIGHT AND LENGTH OF FENCE.
2. PROVIDE PERIODIC INSPECTION AND MAINTENANCE OF FENCE.
3. FENCE SHALL BE HIGH DENSITY ORANGE POLYETHYLENE SAFETY FENCE AS MANUFACTURED BY EROSION RUNNER® OR APPROVED EQUAL.

VILLAGE OF MAMARONECK STANDARD CONSTRUCTION DETAILS	CONSTRUCTION FENCE	VILLAGE OF MAMARONECK, VILLAGE MUNICIPAL BUILDING, 169 MT. PLEASANT AVENUE (3RD FLOOR), WESTCHESTER COUNTY, VILLAGE OF MAMARONECK, NY 10543, PHONE: (914) 777–7731, FAX: (914) 777–7792	PROJECT: DETAILS; SCALE: NOT TO SCALE; DATE: 03/13/2014
PREPARED IN THE OFFICE OF THE VILLAGE ENGINEER	DESIGNED BY: ARC, PE; CHECKED BY: ARC, PE; DRAWN BY: ARC, PE; VOM Construction Fence.dwg		SD-1B

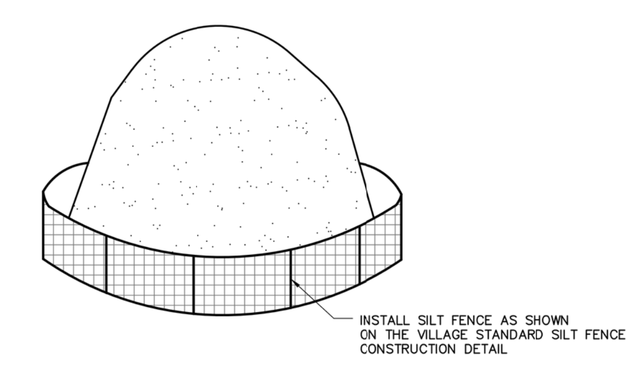

NOTES:

1. ALL STOCKPILES SHALL BE SURROUNDED BY SILT FENCING.
2. STOCKPILES SHALL HAVE A MAXIMUM 2:1 (H:V) SIDE SLOPE.
3. REPAIR/OR REPLACE ANY SILT FENCING DAMAGED DUE TO CONSTRUCTION ACTIVITIES OR STOCKPILE MITIGATION.
4. STOCKPILE SHALL BE LOCATED IN AREAS AS SHOWN ON THE DRAWINGS OR APPROVED BY THE ENGINEER.

VILLAGE OF MAMARONECK STANDARD CONSTRUCTION DETAILS	TEMPORARY SOIL/MATERIAL STOCKPILE AREA	VILLAGE OF MAMARONECK, VILLAGE MUNICIPAL BUILDING, 169 MT. PLEASANT AVENUE (3RD FLOOR), WESTCHESTER COUNTY, VILLAGE OF MAMARONECK, NY 10543, PHONE: (914) 777–7731, FAX: (914) 777–7792	PROJECT: DETAILS; SCALE: NOT TO SCALE; DATE: 03/13/2014
PREPARED IN THE OFFICE OF THE VILLAGE ENGINEER	DESIGNED BY: ARC, PE; CHECKED BY: ARC, PE; DRAWN BY: ARC, PE; VOM Temporary Stockpile Area.dw		SD-1H

ANY ALTERATIONS OR REVISIONS OF THESE PLANS, UNLESS DONE BY OR UNDER THE DIRECTION OF THE NYS LICENSED AND REGISTERED ENGINEER THAT PREPARED THEM, IS A VIOLATION OF THE NYS EDUCATION LAW.

No.	Revisions	Date
1.	REVISED PER TOWN COMMENTS	9-27-18

THIS PLAN NOT VALID FOR CONSTRUCTION WITHOUT ENGINEER'S SEAL & SIGNATURE

PROJECT:

SELF STORAGE BUILDING ADDITION
560 FENIMORE ROAD
VILLAGE OF MAMARONECK
WESTCHESTER COUNTY – NEW YORK

SITE DETAILS

STATE OF NEW YORK · MICHAEL F. SHAW · No. 80831 · LICENSED PROFESSIONAL ENGINEER

HEC HUDSON ENGINEERING & CONSULTING, P.C.
45 Knollwood Road - Suite 201
Elmsford, New York 10523
T: 914-909-0420
F: 914-560-2086
© 2018

Date:	2/8/18
Scale:	1" = 20'
Designed By:	D.C.
Checked By:	M.S.
Sheet No.	C-5
Sheet:	5 of 7

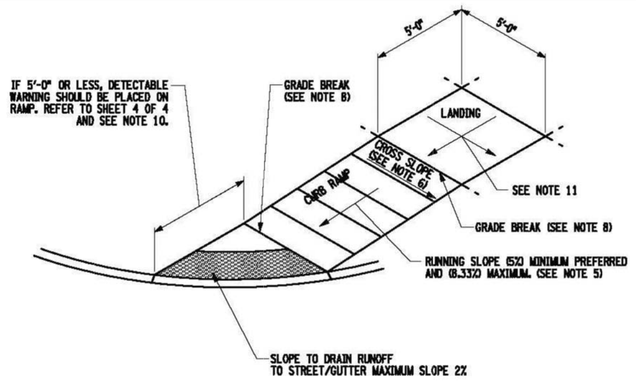

CURB RAMP WITHOUT SIDE FLARES
TYPICAL DIMENSIONING

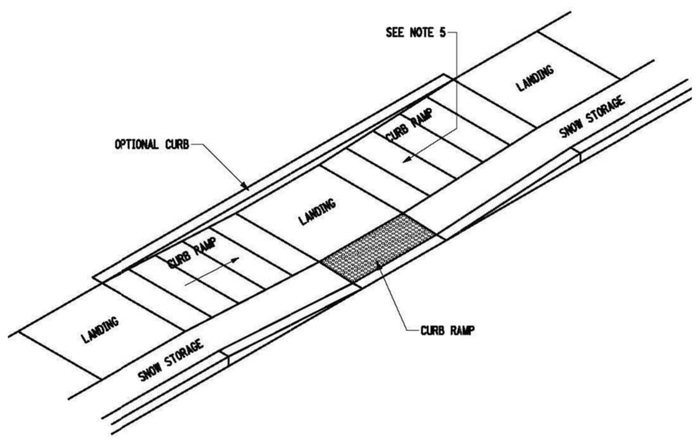

MID-BLOCK CROSSING CURB RAMP
TYPICAL DIMENSIONING

VILLAGE OF MAMARONECK STANDARD CONSTRUCTION DETAILS	SIDEWALK CURB RAMPS (SHEET 1 OF 8)	VILLAGE OF MAMARONECK, VILLAGE MUNICIPAL BUILDING, 169 MT. PLEASANT AVENUE (3RD FLOOR), WESTCHESTER COUNTY, VILLAGE OF MAMARONECK, NY 10543, PHONE: (914) 777-7731, FAX: (914) 777-7792	PROJECT: DETAILS, SCALE:NOT TO SCALE, DATE: 03/13/2014
PREPARED IN THE OFFICE OF THE VILLAGE ENGINEER	DESIGNED BY: ARC, PE; CHECKED BY: ARC, PE; DRAWN BY: ARC, PE; VGM NYSDOT Sidewalk Curb Ramp		SD-5H

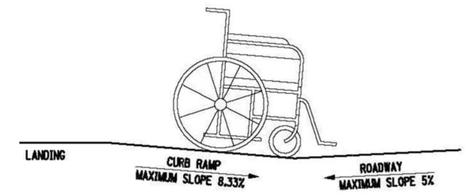

NOTE: THE COUNTER SLOPE OF THE GUTTER OR STREET AT THE FOOT OF A CURB RAMP, LANDING, OR BLENDED TRANSITION SHALL BE 5% MAXIMUM

COUNTER SLOPE CONDITIONS

GENERAL NOTES:

1. THE DIMENSIONS AND SLOPES PRESENTED IN THE DETAILS ARE THE MINIMUM NECESSARY TO COMPLY WITH THE ADA AND DOT STANDARDS. ANY DEVIATION LESS THAN THE MINIMUM WIDTH OR GREATER THAN THE MAXIMUM SLOPE FROM THESE STANDARDS MUST BE DOCUMENTED WITH THE STANDARDS BEING MET TO THE GREATEST EXTENT PRACTICABLE AND CONSISTENT WITH THE MOST CURRENT ADAAG.
2. CURB RAMPS, LANDINGS AND BLENDED TRANSITIONS MAY REQUIRE THE USE OF DETECTABLE WARNINGS. DETECTABLE WARNINGS ON THIS SHEET ARE SHOWN FOR ILLUSTRATION ONLY. REFER TO THE DETECTABLE WARNING DETAILS ON SHEET 4 OF 4 FOR DETAILS ON PLACEMENT, ORIENTATION & DIMENSIONS. REFER TO CHAPTER 18 OF THE HIGHWAY DESIGN MANUAL FOR MORE INFORMATION.

CURB RAMP NOTES:

3. THE MINIMUM WIDTH FOR SIDEWALK CURB RAMPS IS 5'-0".
4. THE RUNNING SLOPE OF A CURB RAMP SHALL BE 1:20 (5%) MINIMUM (PREFERRED) AND 1:12 (8.33%) MAXIMUM.
5. WHERE THE SLOPE OF THE ROADWAY EXCEEDS 8.33% THE CURB RAMP LENGTH IS THE LENGTH NECESSARY TO MEET THE EXISTING SIDEWALK. IT IS NOT NECESSARY THAT THE RAMP LENGTH EXCEED 15'-0".
6. THE CROSS SLOPE OF CURB RAMPS SHOULD BE AS FLAT AS POSSIBLE, NOT TO EXCEED 1:50 (2%). THE CROSS SLOPE AT MIDBLOCK CROSSINGS MAY BE WARPED TO MEET STREET OR HIGHWAY GRADE.
7. THE VERTICAL ALIGNMENT OF A CURB RAMP, EXCLUDING THE FLARES, SHALL BE PLANAR. GRADE BREAKS SHALL BE FLUSH AND PERPENDICULAR TO THE DIRECTION OF THE RAMP RUN.
8. RAMP TRANSITIONS BETWEEN WALKS, LANDINGS, GUTTERS, OR STREETS SHALL BE FLUSH AND FREE OF ABRUPT VERTICAL CHANGES (1/4" MAX).
9. WHERE A PEDESTRIAN CIRCULATION PATH CROSSES THE CURB RAMP, FLARED SIDES WITH A SLOPE OF 10% MAXIMUM, MEASURED PARALLEL TO THE CURB LINE, SHALL BE PROVIDED.

LANDING NOTES:

10. LANDINGS SHALL HAVE A MINIMUM CLEAR DIMENSION OF A 5'-0" BY 5'-0" EXCEPT AT THE BOTTOM OF RAMPS TYPE 1 & 2 ON SHEET 2 OF 4.
11. THE RUNNING AND CROSS SLOPES ON LANDINGS AT INTERSECTIONS IS 1:50 (2%) MAXIMUM. THE RUNNING AND CROSS SLOPES AT MIDBLOCK CROSSINGS MAY BE WARPED TO MEET STREET OR HIGHWAY GRADE.

NOTES:

1. FOR DIMENSIONS & GEOMETRIC VALUES REFER TO SHEET 1 OF 4.
2. THE CONFIGURATIONS SHOWN GENERICALLY REPRESENT THE MOST COMMON SITUATIONS ENCOUNTERED ON NYSDOT PROJECTS. THEY ARE INTENDED TO PRESENT CURB RAMP DESIGN CONCEPTS. SITE CONDITIONS AT INDIVIDUAL LOCATIONS REQUIRE SPECIFIC DESIGNS. CURB RAMP DESIGNS MUST BE CONSISTENT WITH THE PROVISIONS OF SHEETS 1, 2, AND 3 OF 4. REFER TO REGIONAL LANDSCAPE ARCHITECT FOR ADDITIONAL DESIGN GUIDANCE.
3. COORDINATE TRAFFIC CONTROL DEVICES, UTILITY LOCATIONS, SIGNS, STREET FURNITURE AND DRAINAGE TO ENSURE A CONTINUOUS PEDESTRIAN ACCESS ROUTE AT ALL CURB RAMP LOCATIONS. GUIDANCE FOR CROSSWALK MARKINGS AND TRAFFIC CONTROL DEVICES IS PROVIDED IN THE MUTCD.
4. DETECTABLE WARNINGS SHOWN ON THIS SHEET ARE FOR ILLUSTRATION ONLY. FOR SPECIFIC PLACEMENT ORIENTATIONS AND DIMENSIONS REFER TO SHEET 4 OF 4. SEE NOTE 10.
5. THE CROSS SLOPE OF RAMPS AND/OR LANDINGS AT MID BLOCK CROSSINGS MAY BE WARPED TO MEET STREET OR HIGHWAY GRADE.
6. USE TYPE 8 ONLY WHERE OTHER RAMPS ARE UNUSABLE. SINGLE DIAGONAL OR DEPRESSED CORNER CURB RAMPS SERVING TWO STREET CROSSING DIRECTIONS SHOULD BE AVOIDED IN NEW CONSTRUCTION AND SHOULD ONLY BE CONSIDERED WHERE CONDITIONS REQUIRE THEIR USE.
7. GRATES SHALL NOT BE LOCATED ON CURB RAMPS, BLENDED TRANSITIONS OR LANDINGS. ACCESS COVERS OF SIMILAR SURFACES SHALL COMPLY WITH APPLICABLE SURFACE REQUIREMENTS.
8. UTILITIES, SIGNS, AND OTHER FIXED OBJECTS MAY NOT BE PLACED ON A CURB, OR IN A MANNER THAT INTERFERES WITH THE USE OF THE CURB RAMP.
9. THE SURFACE OF ALL CURB RAMPS SHALL BE STABLE, FIRM AND SLIP RESISTANT. A COARSE BROOM FINISH RUNNING PERPENDICULAR TO THE SLOPE IS RECOMMENDED ON CONCRETE RAMP SURFACES, EXCLUSIVE OF THE DETECTABLE WARNING FIELDS.
10. THERE SHALL BE A LANDING AT THE TOP OF EACH PERPENDICULAR CURB RAMP AND A LANDING AT THE BOTTOM OF RAMPS TYPE 1 & 2 ON SHEET 2 OF 4.
11. LANDINGS MAY OVERLAP WITH ADJACENT LANDINGS OR A SINGLE LANDING MAY SERVE MULTIPLE CURB RAMPS.
12. LANDINGS MAY OVERLAP WITH THE CLEAR GROUND SPACE REQUIRED AT PEDESTRIAN SIGNAL PUSH BUTTONS.

VILLAGE OF MAMARONECK STANDARD CONSTRUCTION DETAILS	SIDEWALK CURB RAMPS (SHEET 2 OF 8)	VILLAGE OF MAMARONECK, VILLAGE MUNICIPAL BUILDING, 169 MT. PLEASANT AVENUE (3RD FLOOR), WESTCHESTER COUNTY, VILLAGE OF MAMARONECK, NY 10543, PHONE: (914) 777-7731, FAX: (914) 777-7792	PROJECT: DETAILS, SCALE:NOT TO SCALE, DATE: 03/13/2014
PREPARED IN THE OFFICE OF THE VILLAGE ENGINEER	DESIGNED BY: ARC, PE; CHECKED BY: ARC, PE; DRAWN BY: ARC, PE; VGM NYSDOT Sidewalk Curb Ramp		SD-5H

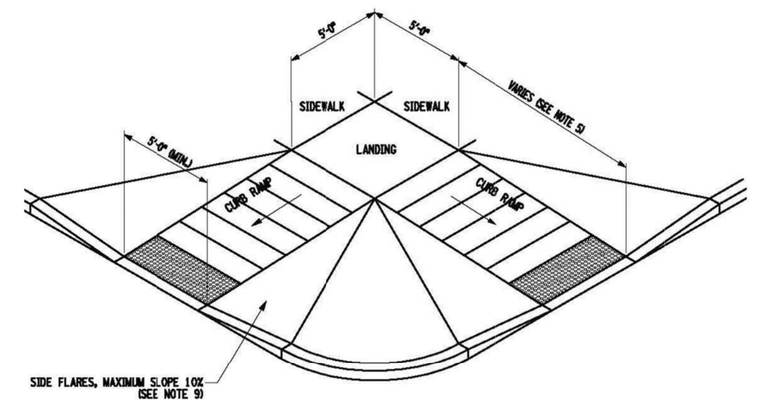

CURB RAMP WITH SIDE FLARES
TYPICAL DIMENSIONING

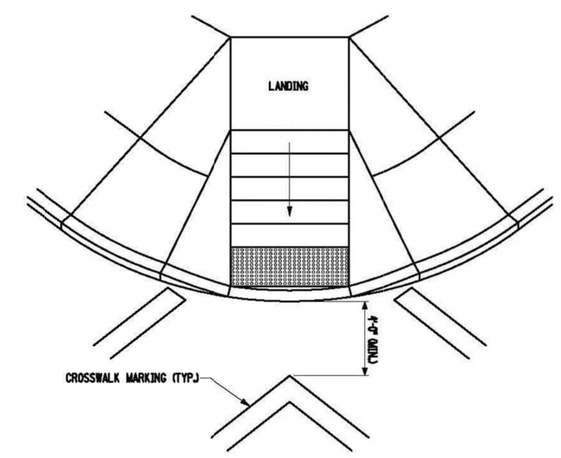

DIAGONAL SIDEWALK CURB RAMP

VILLAGE OF MAMARONECK STANDARD CONSTRUCTION DETAILS	SIDEWALK CURB RAMPS (SHEET 3 OF 8)	VILLAGE OF MAMARONECK, VILLAGE MUNICIPAL BUILDING, 169 MT. PLEASANT AVENUE (3RD FLOOR), WESTCHESTER COUNTY, VILLAGE OF MAMARONECK, NY 10543, PHONE: (914) 777-7731, FAX: (914) 777-7792	PROJECT: DETAILS, SCALE:NOT TO SCALE, DATE: 03/13/2014
PREPARED IN THE OFFICE OF THE VILLAGE ENGINEER	DESIGNED BY: ARC, PE; CHECKED BY: ARC, PE; DRAWN BY: ARC, PE; VGM NYSDOT Sidewalk Curb Ramp		SD-5H

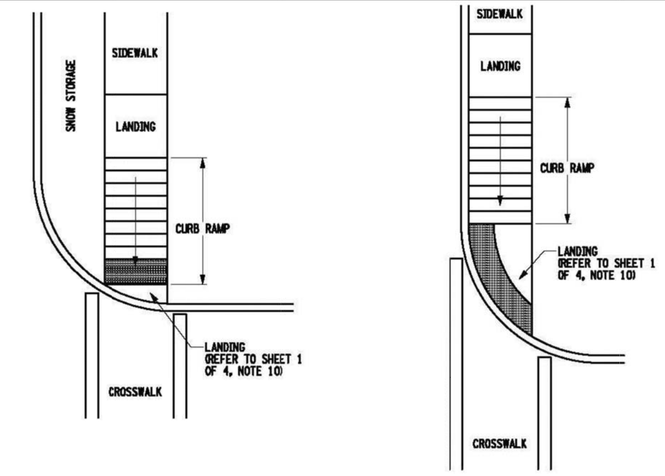

CURB RAMP CONFIGURATION: TYPE 1

CURB RAMP CONFIGURATION: TYPE 2

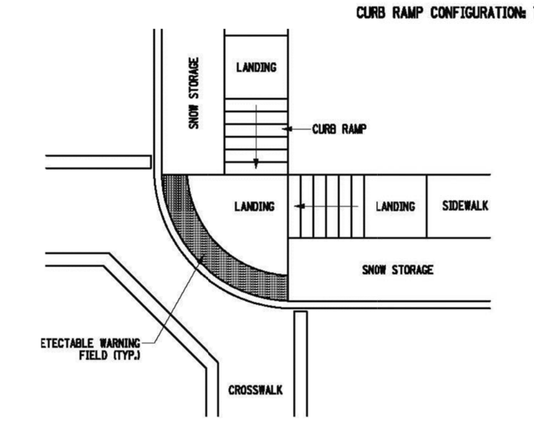

CURB RAMP CONFIGURATION: TYPE 3

VILLAGE OF MAMARONECK STANDARD CONSTRUCTION DETAILS	SIDEWALK CURB RAMPS (SHEET 4 OF 8)	VILLAGE OF MAMARONECK, VILLAGE MUNICIPAL BUILDING, 169 MT. PLEASANT AVENUE (3RD FLOOR), WESTCHESTER COUNTY, VILLAGE OF MAMARONECK, NY 10543, PHONE: (914) 777-7731, FAX: (914) 777-7792	PROJECT: DETAILS, SCALE:NOT TO SCALE, DATE: 03/13/2014
PREPARED IN THE OFFICE OF THE VILLAGE ENGINEER	DESIGNED BY: ARC, PE; CHECKED BY: ARC, PE; DRAWN BY: ARC, PE; VGM NYSDOT Sidewalk Curb Ramp		SD-5H

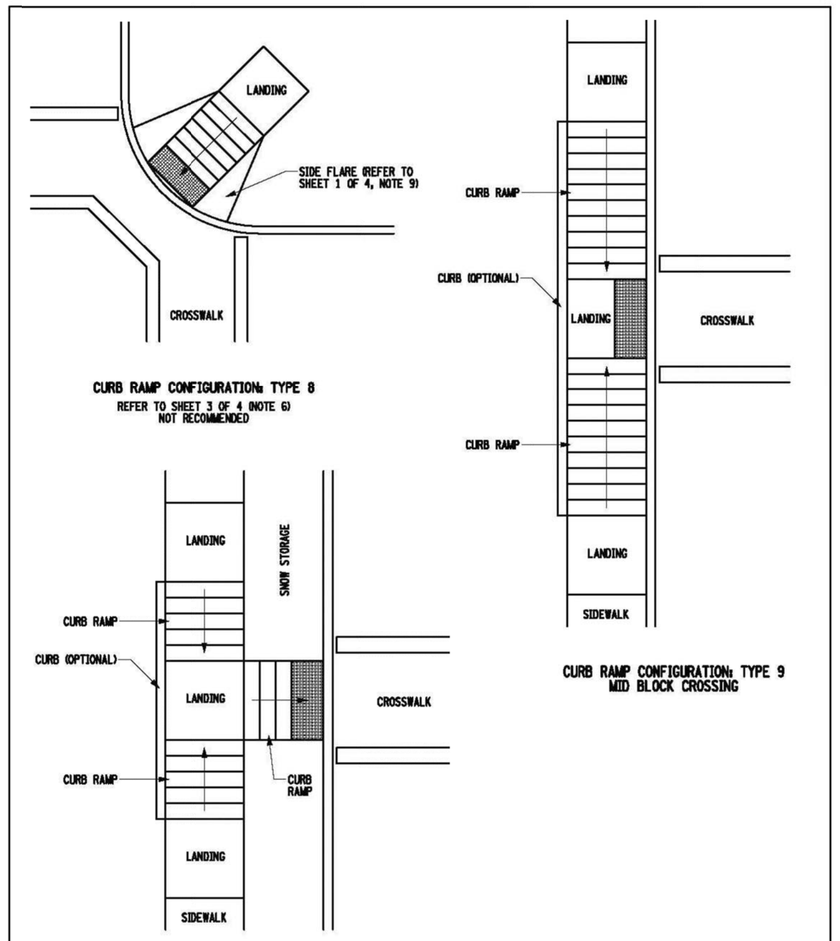

CURB RAMP CONFIGURATION: TYPE 8
REFER TO SHEET 3 OF 4 (NOTE 6)
NOT RECOMMENDED

CURB RAMP CONFIGURATION: TYPE 9
MID BLOCK CROSSING

CURB RAMP CONFIGURATION: TYPE 10
MID BLOCK CROSSING

VILLAGE OF MAMARONECK STANDARD CONSTRUCTION DETAILS	SIDEWALK CURB RAMPS (SHEET 7 OF 8)	VILLAGE OF MAMARONECK, VILLAGE MUNICIPAL BUILDING, 169 MT. PLEASANT AVENUE (3RD FLOOR), WESTCHESTER COUNTY, VILLAGE OF MAMARONECK, NY 10543, PHONE: (914) 777-7731, FAX: (914) 777-7792	PROJECT: DETAILS, SCALE:NOT TO SCALE, DATE: 03/13/2014
PREPARED IN THE OFFICE OF THE VILLAGE ENGINEER	DESIGNED BY: ARC, PE; CHECKED BY: ARC, PE; DRAWN BY: ARC, PE; VGM NYSDOT Sidewalk Curb Ramp		SD-5H

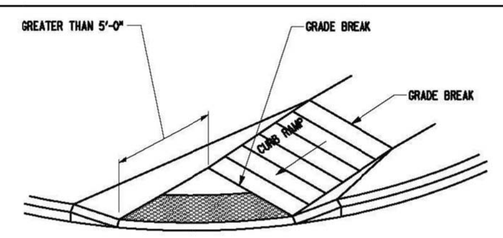

DETECTABLE WARNING PLACEMENT DETAIL 1

NOTE: IF THE DISTANCE FROM THE GRADE BREAK IS GREATER THAN OR EQUAL TO 5'-0", DETECTABLE WARNINGS SHOULD BE PLACED ALONG THE RADIUS OF THE CURVE AS SHOWN IN THE ABOVE DETAIL.

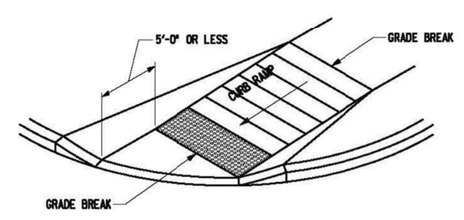

DETECTABLE WARNING PLACEMENT DETAIL 2

NOTE: IF THE DISTANCE FROM THE GRADE BREAK IS LESS THAN OR EQUAL TO 5'-0", DETECTABLE WARNINGS SHOULD BE PLACED ON THE CURB RAMP ALONG THE BOTTOM GRADE BREAK WITH ONE CORNER 5" TO 9" FROM THE FRONT OF THE CURB OR EDGE OF THE ROADWAY.

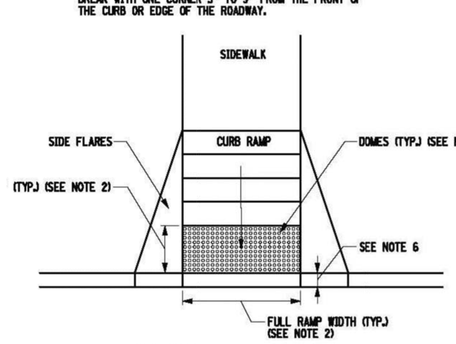

DETECTABLE WARNING AT CURB RAMP

VILLAGE OF MAMARONECK STANDARD CONSTRUCTION DETAILS	DETECTABLE WARNING PLACEMENT (SHEET 1 OF 3)	VILLAGE OF MAMARONECK, VILLAGE MUNICIPAL BUILDING, 169 MT. PLEASANT AVENUE (3RD FLOOR), WESTCHESTER COUNTY, VILLAGE OF MAMARONECK, NY 10543, PHONE: (914) 777-7731, FAX: (914) 777-7792	PROJECT: DETAILS, SCALE:NOT TO SCALE, DATE: 03/13/2014
PREPARED IN THE OFFICE OF THE VILLAGE ENGINEER	DESIGNED BY: ARC, PE; CHECKED BY: ARC, PE; DRAWN BY: ARC, PE; VGM Detectable Warning Unit.dwg		SD-5I

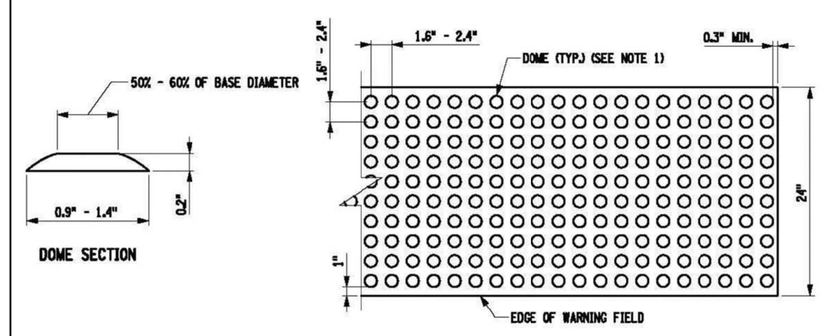

NOTES:

1. THE DETAILS PROVIDED ARE NOT DRAWN TO SCALE. THE QUANTITY OF DOMES DEPICTED ON THE DETECTABLE WARNING UNIT (THE DOMES AND THE ENTIRE 24" LEVEL SURFACE) IS FOR ILLUSTRATION ONLY.

DETECTABLE WARNING UNIT DIMENSIONS:

2. THE SIZE OF THE DETECTABLE WARNING FIELD SHALL BE 24" IN THE DIRECTION OF TRAVEL AND SHALL EXTEND THE FULL WIDTH OF THE CURB RAMP OR FLUSH SURFACE, EXCLUSIVE OF SIDE FLARES.

DOME ALIGNMENT:

3. THE ROWS OF DOMES SHALL BE ALIGNED TO BE PERPENDICULAR OR RADIAL TO THE GRADE BREAK BETWEEN THE RAMP LANDING OR CURB RAMP AND THE STREET.
4. WHERE DOMES ARE ARRAYED RADIALLY THEY MAY DIFFER IN DOME DIAMETER AND CENTER-TO-CENTER SPACING WITHIN THE RANGES SPECIFIED ON THIS SHEET.

COLOR REQUIREMENTS:

5. THE DETECTABLE WARNING FIELD SHALL BE THE COLOR SPECIFIED IN THE CONTRACT DOCUMENTS OR MEET THE REQUIREMENTS OF THE STANDARD SPECIFICATIONS.

DETECTABLE WARNINGS LOCATION:

6. DETECTABLE WARNINGS SHALL BE LOCATED SO THAT THE EDGE OR CORNER OF THE WARNING FIELD NEAREST TO THE ROADWAY IS 5" TO 9" FROM THE FRONT OF THE CURB OR THE ROADWAY EDGE (12" WHERE TRAVERSABLE CURB IS USED).
7. THE EDGE OF THE DETECTABLE WARNING FIELD NEAREST TO A RAILROAD CROSSING SHALL BE 6'-0" MINIMUM AND 15'-0" MAXIMUM FROM THE CENTERLINE OF THE NEAREST RAIL.

NOTES:

1. DETECTABLE WARNINGS SHALL BE INSTALLED ON ALL CURB RAMPS. DETECTABLE WARNINGS SHALL CONSIST OF RAISED TRUNCATED DOMES WITH A DIAMETER OF NOMINAL 0.9 INCHES (23 mm), A HEIGHT OF NOMINAL 0.2 INCHES (5 mm), AND A CENTER-TO-CENTER SPACING OF NOMINAL 2.35 INCHES (60 mm) AND SHALL CONTRACT VISUALLY WITH ADJOINING SURFACES, EITHER LIGHT-ON-DARK OR DARK-ON-LIGHT. DETECTABLE WARNINGS SHALL BE IN ACCORDANCE WITH THE DEPARTMENT OF JUSTICE 28 CFR PART 36 "EXCERPT FROM 28 CFR PART 36: ADA STANDARDS FOR ACCESSIBLE DESIGN" LAST REVISED JULY 1, 1994.
2. DETECTABLE WARNING SYSTEM SHALL BE CAST-IN-PLACE TRUNCATED DOMES PART NUMBER ATS-C-2x5 MANUFACTURED BY ADVANTAGE™ TACTILE SYSTEMS OR APPROVED EQUAL. THE COLOR OF THE DETECTABLE WARNING SYSTEM SHALL BE BRICK RED (FEDERAL COLOR NO. 22144).
3. DETECTABLE WARNING UNITS SHALL BE PAID UNDER NYSDOT ITEM NO. 608.21.

VILLAGE OF MAMARONECK STANDARD CONSTRUCTION DETAILS	DETECTABLE WARNING PLACEMENT (SHEET 3 OF 3)	VILLAGE OF MAMARONECK, VILLAGE MUNICIPAL BUILDING, 169 MT. PLEASANT AVENUE (3RD FLOOR), WESTCHESTER COUNTY, VILLAGE OF MAMARONECK, NY 10543, PHONE: (914) 777-7731, FAX: (914) 777-7792	PROJECT: DETAILS, SCALE:NOT TO SCALE, DATE: 03/13/2014
PREPARED IN THE OFFICE OF THE VILLAGE ENGINEER	DESIGNED BY: ARC, PE; CHECKED BY: ARC, PE; DRAWN BY: ARC, PE; VGM Detectable Warning Unit.dwg		SD-5I

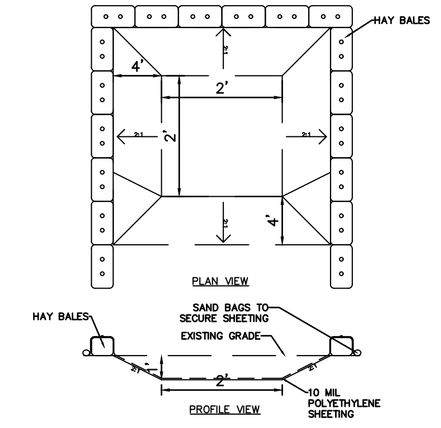

CLEANOUT WASHOUT AREA

CONCRETE WASHOUT AREA NOTES:

1. CONCRETE WASHOUT AREA TO BE INSTALLED PRIOR TO CONCRETE PLACEMENT ON SITE. CONCRETE WASHOUT AREA TO BE ENTIRELY SELF CONTAINED
2. HAY BALES SHALL BE PROVIDED AROUND THE PERIMETER OF CONCRETE WASHOUT AREA FOR CONTAINMENT.
3. WASHOUT AREA SHALL BE LINED WITH PLASTIC SHEETING NO THINNER THAN 10 MILS. SHEETING SHALL HAVE NO HOLES OR TEARS AND SHALL BE ANCHORED BY SAND BAGS ON ALL SIDES EXCEPT ACCESS SIDE. PLASTIC LINING TO BE REPLACED WITH EACH CLEANING
4. SIGNS SHALL BE PROVIDED AT THE CONSTRUCTION ENTRANCE AND CONCRETE AREAS INDICATING LOCATION OF WASHOUT AREA.
5. WASHOUT AREA TO BE ENCLOSED IN CONSTRUCTION FENCE.
6. WASHOUT AREAS TO BE INSPECTED DAILY TO ENSURE LINER IS INTACT AND ADEQUATE CAPACITY IS AVAILABLE AT ALL TIMES. WASHOUT AREAS SHALL BE INSPECTED IMMEDIATELY AFTER HEAVIER RAINS. DAMAGED OR LEAKING WASHOUT AREAS TO BE DEACTIVATED AND REPAIRED IMMEDIATELY.
7. CONCRETE WASTE SHALL BE REMOVED AND DISPOSED OF ONCE IT REACHES THREE-QUARTERS OF THE WASHOUT AREA'S HEIGHT. ALL WASTE SHALL BE DISPOSED OF IN A MANNER CONSISTENT WITH APPLICABLE LAWS, REGULATIONS, AND GUIDELINES OF MUNICIPALITY.

No.	Revisions Description	Date
1.	REVISED PER TOWN COMMENTS	9-27-18

THIS PLAN NOT VALID FOR CONSTRUCTION WITHOUT ENGINEER'S SEAL & SIGNATURE

PROJECT:

SELF STORAGE BUILDING ADDITION
560 FENIMORE ROAD
VILLAGE OF MAMARONECK
WESTCHESTER COUNTY – NEW YORK

SITE DETAILS

HEC

HUDSON ENGINEERING & CONSULTING, P.C.
45 Knollwood Road - Suite 201
Elmsford, New York 10523
T: 914-909-0420
F: 914-560-2086

© 2018

STATE OF NEW YORK · MICHAEL S. STEIN · No. 80637 · LICENSED PROFESSIONAL ENGINEER

Date:	2/8/18
Scale:	1" = 20'
Designed By:	D.C.
Checked By:	M.S.
Sheet No.	C-6
Sheet:	6 / 7

ANY ALTERATIONS OR REVISIONS OF THESE PLANS, UNLESS DONE BY OR UNDER THE DIRECTION OF THE NYS LICENSED AND REGISTERED ENGINEER THAT PREPARED THEM, IS A VIOLATION OF THE NYS EDUCATION LAW.

CONSTRUCTION PHASE:

DURING THE CONSTRUCTION PHASE OF THE PROJECT, A SEDIMENT AND EROSION CONTROL PLAN SHALL BE IMPLEMENTED IN ACCORDANCE WITH THE NEW YORK STATE DEPARTMENT OF ENVIRONMENTAL CONSERVATION'S BEST MANAGEMENT PRACTICES (BMP). THE PRIMARY GOALS OF THE SEDIMENT AND EROSION CONTROL PLAN ARE TO PREVENT THE TRACKING OF DIRT AND MUD ONTO ADJACENT ROADS, TO PREVENT MUD AND SILT FROM ENTERING INTO EXISTING AND PROPOSED DRAINAGE FACILITIES, AND TO PROTECT THE RECEIVING WATERS FROM CONTAMINATION DURING THE CONSTRUCTION.

DURING CONSTRUCTION, THE PARTY RESPONSIBLE FOR IMPLEMENTING THE TEMPORARY (DURING CONSTRUCTION) STORMWATER MANAGEMENT FACILITIES MAINTENANCE PROGRAM WILL BE THE OWNER. THE NAME AND CONTACT INFORMATION WILL BE FILED WITH THE VILLAGE OF CARMEL AND THE NYSDEC AT THE TIME OF THE PRECONSTRUCTION MEETING.

A NEW YORK STATE PROFESSIONAL ENGINEER OR CERTIFIED PROFESSIONAL IN EROSION AND SEDIMENT CONTROL (P.E. OR CPESC) SHALL CONDUCT AN ASSESSMENT OF THE SITE PRIOR TO THE COMMENCEMENT OF CONSTRUCTION AND CERTIFY IN AN INSPECTION REPORT THAT THE APPROPRIATE EROSION AND SEDIMENT CONTROLS SHOWN ON THE PLAN HAVE BEEN ADEQUATELY INSTALLED AND/OR IMPLEMENTED TO ENSURE OVERALL PREPAREDNESS OF THE SITE FOR CONSTRUCTION. FOLLOWING THE COMMENCEMENT OF CONSTRUCTION, SITE INSPECTIONS SHALL BE CONDUCTED BY THE P.E. OR CPESC AT LEAST EVERY 7 CALENDAR DAYS AND WITHIN 24 HOURS OF THE END OF A STORM EVENT OF 0.5 INCHES OR GREATER.

DURING EACH INSPECTION, THE REPRESENTATIVE SHALL RECORD THE FOLLOWING:

1. ON A SITE MAP, INDICATE THE EXTENT OF ALL DISTURBED SITE AREAS AND DRAINAGE PATHWAYS. INDICATE SITE AREAS THAT ARE EXPECTED TO UNDERGO INITIAL DISTURBANCE OR SIGNIFICANT SITE WORK WITHIN THE NEXT 14-DAY PERIOD;
2. INDICATE ON A SITE MAP ALL AREAS OF THE SITE THAT HAVE UNDERGONE TEMPORARY OR PERMANENT STABILIZATION;
3. INDICATE ALL DISTURBED SITE AREAS THAT HAVE NOT UNDERGONE ACTIVE SITE WORK DURING THE PREVIOUS 14-DAY PERIOD;
4. INSPECT ALL SEDIMENT CONTROL PRACTICES AND RECORD APPROXIMATE DEGREE OF SEDIMENT ACCUMULATION AS A PERCENTAGE OF THE SEDIMENT STORAGE VOLUME;
5. INSPECT ALL EROSION AND SEDIMENT CONTROL PRACTICES AND RECORD ALL MAINTENANCE REQUIREMENTS. IDENTIFY ANY EVIDENCE OF RILL OR GULLY EROSION OCCURRING ON SLOPES AND ANY LOSS OF STABILIZING VEGETATION OR SEEDING/MULCHING. DOCUMENT ANY EXCESSIVE DEPOSITION OF SEDIMENT OR PONDING WATER ALONG THE BARRIER. RECORD THE DEPTH OF SEDIMENT WITHIN CONTAINMENT STRUCTURES AND ANY EROSION NEAR OUTLET AND OVERFLOW STRUCTURES.
6. ALL IDENTIFIED DEFICIENCIES.

THE P.E. OR CPESC SHALL MAINTAIN A RECORD OF ALL INSPECTION REPORTS IN A SITE LOGBOOK. THE SITE LOGBOOK SHALL BE MAINTAINED ON-SITE AND BE MADE AVAILABLE TO THE VILLAGE OF BRIARCLIFF MANOR AND THE NYSDEC. A SUMMARY OF THE SITE INSPECTION ACTIVITIES SHALL BE POSTED ON A MONTHLY BASIS IN A PUBLICLY ACCESSIBLE LOCATION AT THE SITE.

THE PROJECTS ANTICIPATED START DATE IS SEPTEMBER 2017 AND THE ANTICIPATED COMPLETION DATE IS ESTIMATED TO OCCUR IN SEPTEMBER APRIL 2018.

CONSTRUCTION SEQUENCING:

THE FOLLOWING EROSION CONTROL SCHEDULE SHALL BE UTILIZED:

1. INSTALL CONSTRUCTION ENTRANCE TO THE DEVELOPMENT AREA.
2. ESTABLISH CONSTRUCTION STAGING AREA.
3. INSTALL TREE PROTECTION ON TREES AS NOTED ON PLANS.
4. SELECTIVE VEGETATION REMOVAL FOR SILT FENCE INSTALLATION.
5. INSTALL SILT FENCE DOWN SLOPE OF ALL AREAS TO BE DISTURBED AS SHOWN ON THE PLAN.
6. REMOVE TREES WHERE NECESSARY (CLEAR & GRUB) FOR THE PROPOSED CONSTRUCTION.
7. STRIP TOPSOIL AND STOCKPILE AT THE LOCATIONS SPECIFIED ON THE PLANS (UP GRADIENT OF EROSION CONTROL MEASURES). TEMPORARILY STABILIZE TOPSOIL STOCKPILES (HYDROSEED DURING MAY 1ST THROUGH OCTOBER 31ST PLANTING SEASON OR BY COVERING WITH A TARPAULIN(S) NOVEMBER 1ST THROUGH APRIL 30TH. INSTALL SILT FENCE AROUND TOE OF SLOPE.
8. DEMOLISH ANY EXISTING SITE FEATURES AND/OR STRUCTURES NOTED AS BEING REMOVED ON THE CONSTRUCTION DOCUMENTS, AND DISPOSE OF OFF-SITE.
9. ROUGH GRADE SITE.
10. INSTALL ADDITIONAL SILT FENCING AS NECESSARY.
11. ROUGH GRADE PARKING LOT AND INSTALL TRENCH DRAINS AND DRAIN INLETS, AS WELL AS ALL ASSOCIATED ONSITE PIPING.
12. OBTAIN STREET OPENING PERMIT FOR DRAINAGE CONNECTION TO EXISTING CATCH BASIN IN FENIMORE ROAD, AS WELL AS PROPOSED CURB CUT WIDENINGS.
13. INSTALL DRAINAGE WORK TRIBUTARY TO EXISTING MUNICIPAL CATCH BASIN IN FENIMORE ROAD UP TO LOCATION OF PROPOSED STORMWATER PLANTER18. EXCAVATE AND CONSTRUCT FOUNDATIONS FOR NEW BUILDING.
14. CONSTRUCT STORMWATER PLANTER ADJACENT TO BUILDING ADDITION.
15. CONSTRUCT BUILDING. INSTALL AND CONNECT ALL ROOF DRAIN LEADERS TO PREVIOUSLY INSTALLED STORMWATER PLANTER.
16. INSTALL CURBING, AND SUB-BASE COURSES. FINE GRADE AND SEED ALL DISTURBED AREAS. SPREAD SALT HAY OVER SEEDED AREAS.
17. INSTALL BITUMINOUS CONCRETE TOP COURSE.
18. CLEAN PAVEMENT, DRAIN LINES, CATCH BASINS AND PRETREATMENT DEVICES. CLEAN EXFILTRATION/ATTENUATION GALLERIES.
19. REMOVE ALL TEMPORARY SOIL EROSION AND SEDIMENT CONTROL MEASURES AFTER THE SITE IS STABILIZED WITH VEGETATION.

*SOIL EROSION AND SEDIMENT CONTROL MAINTENANCE MUST OCCUR EVERY TWO WEEKS AND PRIOR TO AND AFTER EVERY ½" OR GREATER RAINFALL EVENT.

CONSTRUCTION PRACTICES TO MINIMIZE STORMWATER CONTAMINATION:

GENERAL:

ADEQUATE MEASURES SHALL BE TAKEN TO MINIMIZE CONTAMINANT PARTICLES ARISING FROM THE DISCHARGE OF SOLID MATERIALS, INCLUDING BUILDING MATERIALS, GRADING OPERATIONS, AND THE RECLAMATION AND PLACEMENT OF PAVEMENT, DURING PROJECT CONSTRUCTION, INCLUDING BUT NOT LIMITED TO:

- BUILDING MATERIALS, GARBAGE, AND DEBRIS SHALL BE CLEANED UP DAILY AND DEPOSITED INTO DUMPSTERS, WHICH WILL BE PERIODICALLY REMOVED FROM THE SITE AND APPROPRIATELY DISPOSED OF. ALL DUMPSTERS AND CONTAINERS LEFT ON-SITE SHALL BE COVERED AND SURROUNDED WITH SILT FENCE IN ORDER TO PREVENT CONTAMINANTS FROM LEAVING THE SITE. SILT FENCING SHALL BE INSPECTED ON A WEEKLY BASIS.
- DUMP TRUCKS HAULING MATERIAL FROM THE CONSTRUCTION SITE WILL BE COVERED WITH A TARPAULIN.
- THE PAVED STREET ADJACENT TO THE SITE ENTRANCE WILL BE SWEPT DAILY TO REMOVE EXCESS MUD, DIRT, OR ROCK TRACKED FROM THE SITE.
- PETROLEUM PRODUCTS WILL BE STORED IN TIGHTLY SEALED CONTAINERS THAT ARE CLEARLY LABELED.
- ALL VEHICLES ON SITE WILL BE MONITORED FOR LEAKS AND RECEIVE REGULAR PREVENTIVE MAINTENANCE TO REDUCE THE CHANCE OF LEAKAGE.
- ALL SPILLS WILL BE CLEANED UP IMMEDIATELY UPON DISCOVERY. SPILLS LARGE ENOUGH TO REACH THE STORM SYSTEM WILL BE REPORTED TO THE NATIONAL RESPONSE CENTER AT 1-800-424-8802.
- MATERIALS AND EQUIPMENT NECESSARY FOR SPILL CLEANUP WILL BE KEPT IN THE TEMPORARY MATERIAL STORAGE TRAILER ONSITE. EQUIPMENT WILL INCLUDE, BUT NOT BE LIMITED TO, BROOMS, DUST PANS, MOPS, RAGS, GLOVES, GOGGLES, KITTY LITTER, SAND, SAW DUST, AND PLASTIC AND METAL TRASH CONTAINERS.
- ALL PAINT CONTAINERS AND CURING COMPOUNDS WILL BE TIGHTLY SEALED AND STORED WHEN NOT REQUIRED FOR USE. EXCESS PAINT WILL NOT BE DISCHARGED TO THE STORM SYSTEM, BUT WILL BE PROPERLY DISPOSED ACCORDING TO THE MANUFACTURER'S INSTRUCTIONS.
- SANITARY WASTE WILL BE COLLECTED FROM PORTABLE UNITS A MINIMUM OF TWO TIMES A WEEK TO AVOID OVERFILLING. ALL SANITARY WASTE UNITS SHALL BE SURROUNDED BY SILT FENCE TO PREVENT CONTAMINANTS FROM LEAVING THE SITE. SILT FENCING SHALL BE INSPECTED ON A WEEKLY BASIS.
- ANY ASPHALT SUBSTANCES USED ON-SITE WILL BE APPLIED ACCORDING TO THE MANUFACTURER'S RECOMMENDATION.
- FERTILIZERS WILL BE STORED IN A COVERED SHED AND PARTIALLY USED BAGS WILL BE TRANSFERRED TO A SEALABLE BIN TO AVOID SPILLS AND WILL BE APPLIED ONLY IN THE MINIMUM AMOUNTS RECOMMENDED BY THE MANUFACTURER AND WORKED INTO THE SOIL TO LIMIT EXPOSURE TO STORMWATER.
- NO DISTURBED AREA SHALL BE LEFT UN-STABILIZED FOR LONGER THAN 14 DAYS DURING THE GROWING SEASON.
- WHEN EROSION IS LIKELY TO BE A PROBLEM, GRUBBING OPERATIONS SHALL BE SCHEDULED AND PERFORMED SUCH THAT GRADING OPERATIONS AND PERMANENT EROSION CONTROL FEATURES CAN FOLLOW WITHIN 24 HOURS THEREAFTER.
- AS WORK PROGRESSES, PATCH SEEDING SHALL BE DONE AS REQUIRED ON AREAS PREVIOUSLY TREATED TO MAINTAIN OR ESTABLISH PROTECTIVE COVER.
- DRAINAGE PIPES AND SWALES/DITCHES SHALL GENERALLY BE CONSTRUCTED IN A SEQUENCE FROM OUTLET TO INLET IN ORDER TO STABILIZE OUTLET AREAS AND DITCHES BEFORE WATER IS DIRECTED TO THE NEW INSTALLATION OR ANY PORTION THEREOF, UNLESS CONDITIONS UNIQUE TO THE LOCATION WARRANT AN ALTERNATIVE METHOD.

SPILL CONTROL & SPILL RESPONSE:

- FOR ALL HAZARDOUS MATERIALS STORED ON SITE, THE MANUFACTURER'S RECOMMENDED METHODS FOR SPILL CLEAN UP WILL BE CLEARLY POSTED. SITE PERSONNEL WILL BE MADE AWARE OF THE PROCEDURES, AND THE LOCATIONS OF THE INFORMATION AND CLEANUP SUPPLIES.
- APPROPRIATE CLEANUP MATERIALS AND EQUIPMENT WILL BE MAINTAINED BY THE CONTRACTOR IN THE MATERIALS STORAGE AREA ON-SITE. AS APPROPRIATE, EQUIPMENT AND MATERIALS MAY INCLUDE ITEMS SUCH AS BOOMS, DUST PANS, MOPS, RAGS, GLOVES, GOGGLES, KITTY LITTER, SAND, SAWDUST, AND PLASTIC AND METAL TRASH CONTAINERS SPECIFICALLY FOR CLEAN UP PURPOSES.
- ALL SPILLS WILL BE CLEANED IMMEDIATELY AFTER DISCOVERY AND THE MATERIALS DISPOSED OF PROPERLY.
- THE SPILL AREA WILL BE KEPT WELL VENTILATED AND PERSONNEL WILL WEAR APPROPRIATE PROTECTIVE CLOTHING TO PREVENT INJURY FROM CONTACT WITH A HAZARDOUS SUBSTANCE.
- AFTER A SPILL, A REPORT WILL BE PREPARED DESCRIBING THE SPILL, WHAT CAUSED IT, AND THE CLEANUP MEASURES TAKEN. THE SPILL PREVENTION PLAN WILL BE ADJUSTED TO INCLUDE MEASURES TO PREVENT THIS TYPE OF SPILL FROM REOCCURRING, AS WELL AS CLEAN UP INSTRUCTIONS IN THE EVENT OF REOCCURRENCES.
- THE CONTRACTOR'S SITE SUPERINTENDENT, RESPONSIBLE FOR DAY-TO-DAY OPERATIONS, WILL BE THE SPILL PREVENTION AND CLEANUP COORDINATOR. THE CONTRACTOR IS RESPONSIBLE FOR ENSURING THAT THE SITE SUPERINTENDENT HAS HAD APPROPRIATE TRAINING FOR HAZARDOUS MATERIALS HANDLING, SPILL MANAGEMENT, AND CLEANUP.
- THE CONTRACTOR'S SITE SUPERINTENDENT WILL BE NOTIFIED IMMEDIATELY WHEN A SPILL OR THE THREAT OF A SPILL IS OBSERVED. THE SUPERINTENDENT WILL ASSESS THE SITUATION AND DETERMINE THE APPROPRIATE RESPONSE.
- IF SPILLS REPRESENT AN IMMINENT THREAT OF ESCAPING EROSION AND SEDIMENT CONTROLS AND ENTERING RECEIVING WATERS, PERSONNEL WILL BE DIRECTED TO RESPOND IMMEDIATELY TO CONTAIN THE RELEASE AND NOTIFY THE SUPERINTENDENT AFTER THE SITUATION HAS BEEN STABILIZED.
- SPILL KITS CONTAINING APPROPRIATE MATERIALS AND EQUIPMENT FOR SPILL RESPONSE AND CLEANUP WILL BE MAINTAINED BY THE CONTRACTOR AT THE SITE.
- IF OIL SHEEN IS OBSERVED ON SURFACE WATER, ACTION WILL BE TAKEN IMMEDIATELY TO REMOVE THE MATERIAL CAUSING THE SHEEN. THE CONTRACTOR WILL USE APPROPRIATE MATERIALS TO CONTAIN AND ABSORB THE SPILL. THE SOURCE OF THE OIL SHEEN WILL ALSO BE IDENTIFIED AND REMOVED OR REPAIRED AS NECESSARY TO PREVENT FURTHER RELEASES.
- IF A SPILL OCCURS THE SUPERINTENDENT OR THE SUPERINTENDENT'S DESIGNEE WILL BE RESPONSIBLE FOR COMPLETING THE SPILL REPORTING FORM AND FOR REPORTING THE SPILL TO THE CONTACTS LISTED BELOW.
- PERSONNEL WITH PRIMARY RESPONSIBILITY FOR SPILL RESPONSE AND CLEAN UP WILL RECEIVE TRAINING BY THE CONTRACTOR'S SITE SUPERINTENDENT OR DESIGNEE. THE TRAINING MUST INCLUDE IDENTIFYING THE LOCATION OF THE SPILL KITS AND OTHER SPILL RESPONSE EQUIPMENT AND THE USE OF SPILL RESPONSE MATERIALS.
- SPILL RESPONSE EQUIPMENT WILL BE INSPECTED AND MAINTAINED AS NECESSARY TO REPLACE ANY MATERIALS USED IN SPILL RESPONSE ACTIVITIES.

ANY ALTERATIONS OR REVISIONS OF THESE PLANS, UNLESS DONE BY OR UNDER THE DIRECTION OF THE NYS LICENSED AND REGISTERED ENGINEER THAT PREPARED THEM, IS A VIOLATION OF THE NYS EDUCATION LAW.

SPILL CONTROL NOTIFICATION:

- A REPORTABLE SPILL IS A QUANTITY OF FIVE (5) GALLONS OR MORE OR ANY SPILL OF OIL WHICH: (1) VIOLATES WATER QUALITY STANDARDS, (2) PRODUCES A 'SHEEN' ON A SURFACE WATER, OR (3) CAUSES A SLUDGE OR EMULSION. THIS SPILL MUST BE REPORTED IMMEDIATELY TO THE AGENCIES LISTED BELOW.
- ANY SPILL OF OIL OR HAZARDOUS SUBSTANCE TO WATERS OF THE STATE MUST BE REPORTED IMMEDIATELY BY TELEPHONE TO THE FOLLOWING AGENCIES:

- 911 – POLICE, FIRE AND EMS
- VILLAGE OF MAMARONECK ENGINEERING DEPARTMENT
  169 MOUNT PLEASANT AVENUE
  MAMARONECK, NY 10543
  PHONE: (914) 777-7731
- VILLAGE OF MAMARONECK FIRE DEPARTMENT
  123 MAMARONECK AVENUE
  MAMARONECK, NY 10543
  PHONE: (914) 825-8777
- NYS DEPARTMENT OF ENVIRONMENTAL CONSERVATION (NYSDEC)
  SPILL REPORTING HOTLINE
  (1800) 457-7362
- NATIONAL RESPONSE CENTER: (1800) 424-8802
- LOCAL EMERGENCY PLANNING COMMITTEE (LEPC)
  WESTCHESTER COUNTY OFFICE OF EMERGENCY MANAGEMENT
  200 BRADHURST AVENUE
  HAWTHORNE, NY 10532
  (914) 864-5450
- WESTCHESTER COUNTY DEPARTMENT OF HEALTH (WCDOH)
  SPILL REPORTING HOTLINE
  (914) 813-5000
- U.S. ENVIRONMENTAL PROTECTION AGENCY (USEPA)
  EPCRA INFORMATION HOTLINE
  (1800) 535-0202
- U.S. DEPARTMENT OF LABOR AND OCCUPATIONAL SAFETY AND HEALTH ADMINISTRATION (OSHA)
  TARRYTOWN, NY
  (914) 524-7510

STORMWATER MANAGEMENT FACILITIES MAINTENANCE PROGRAM

MEASURE	DATES FOR INSPECTION	TIMING, ACTIVITY, AND LOCATION
GENERAL MAINTENANCE (STORM SEWER, CATCH BASINS/ DRAIN INLETS, MANHOLES, PRE-TREATMENT DEVICE AND INFILTRATION BASIN)	ALL	ALL STORMWATER FACILITIES SHALL BE INSPECTED IMMEDIATELY AFTER COMPLETION OF CONSTRUCTION, AND THEN MONTHLY FOR THE FIRST THREE (3) MONTHS FOLLOWING THE COMPLETION OF THE PROJECT. WITHIN THE FIRST THREE (3) MONTHS, INSPECTIONS SHALL IMMEDIATELY BE PERFORMED FOLLOWING A LARGE STORM EVENT (I.E. PRODUCING 1/2" (ONE-HALF INCH) OF RAIN OR GREATER. THEREAFTER, THESE FACILITIES SHALL BE INSPECTED AS DESCRIBED AS FOLLOWS. UPON INSPECTION, FACILITIES SHALL BE IMMEDIATELY MAINTAINED AND/OR CLEANED AS MAY BE REQUIRED. ANY SITE AREAS EXHIBITING SOIL EROSION OF ANY KIND SHALL BE IMMEDIATELY RESTORED AND STABILIZED WITH VEGETATION, MULCH OR STONE, DEPENDING ON THE AREA TO BE STABILIZED. UPON EACH INSPECTION, ALL VISIBLE DEBRIS INCLUDING, BUT NOT LIMITED TO, TWIGS, LEAF AND FOREST LITTER SHALL BE REMOVED FROM THE BASIN, OVERFLOW DISCHARGE POINTS AND FRAMES AND GRATES OF DRAINAGE STRUCTURES.
SUMPS – CATCH BASIN/DRAIN INLETS AND DRAIN MANHOLES	UPON COMPLETION OF CONSTRUCTION: –ONCE A MONTH FOR THE FIRST THREE (3) MONTHS AFTER FIRST THREE (3) MONTHS: –EVERY FOUR (4) MONTHS THEREAFTER	ALL CATCH BASIN/DRAIN INLETS AND DRAIN MANHOLES WITH SUMPS HAVE BEEN DESIGNED TO TRAP SEDIMENT PRIOR TO ITS TRANSPORT TO THE INFILTRATION PRACTICE AND, ULTIMATELY, DOWNSTREAM. THESE SUMPS WILL REQUIRE PERIODIC INSPECTION AND MAINTENANCE TO ENSURE THAT ADEQUATE DEPTH IS MAINTAINED WITHIN THE SUMPS. THE OWNER, OR THEIR DULY AUTHORIZED REPRESENTATIVE, SHALL TAKE MEASUREMENTS OF THE SUMP DEPTH. IF SEDIMENT HAS ACCUMULATED TO 1/2 (ONE-HALF) THE DEPTH OF THE SUMP, ALL SEDIMENT SHALL BE REMOVED FROM THE SUMP. SEDIMENTS CAN BE REMOVED WITH HAND-LABOR OR WITH A VACUUM TRUCK. THE USE OF ROAD SALT SHALL BE MINIMIZED FOR MAINTENANCE OF ROADWAY AND DRIVEWAY AREAS.
EXISTING HYDRODYNAMIC SEPARATOR	UPON COMPLETION OF CONSTRUCTION: –QUARTERLY FOR FIRST YEAR AFTER FIRST YEAR: –EVERY SIX (6) MONTHS THEREAFTER (SPRING & FALL)	THE HYDRODYNAMIC SEPARATOR DEVICE LOCATED IMMEDIATELY UPSTREAM OF THE OUTFALL SHALL BE MAINTAINED DURING DRY WEATHER CONDITIONS. ANY ACCUMULATED SEDIMENTS SHALL BE VACUUMED OUT WHEN SEDIMENT HAS REACHED 1/2 (ONE-HALF) THE CAPACITY OF THE ISOLATED SUMP, OR WHEN AN APPRECIABLE LEVEL OF HYDROCARBONS AND TRASH HAS ACCUMULATED, WHICHEVER OCCURS FIRST. WHEN THE SEDIMENT PILE IS WITHIN 30 TO 36 INCHES OF THE WATER SURFACE, THE SYSTEM SHOULD BE MAINTAINED. A VACUUM TRUCK SHALL BE USED TO REMOVE THE ACCUMULATED SEDIMENT AND DEBRIS. REFER TO MANUFACTURER'S LITERATURE FOR DETAILED MAINTENANCE INSTRUCTIONS.
STORMWATER PLANTER	UPON COMPLETION OF CONSTRUCTION: –TWICE IN THE FIRST SIX(6) MONTHS & AFTER EACH STORM EVENT GREATER THAN 0.5-INCHES AFTER FIRST YEAR: –EVERY FOUR (4) MONTHS THEREAFTER & AFTER STORM EVENTS GREATER THAN THE 1-YEAR STORM	ROUTINE MAINTENANCE ACTIVITIES INCLUDE PRUNING AND REPLACING DEAD OR DYING VEGETATION, PLANT THINNING, AND EROSION REPAIR. SINCE STORMWATER PLANTERS ARE NOT TYPICALLY PRECEDED BY PRE-TREATMENT PRACTICES, THE SOIL SURFACE SHOULD BE INSPECTED FOR EVIDENCE OF SEDIMENT BUILD-UP FROM THE CONNECTED IMPERVIOUS SURFACE AND FOR SURFACE PONDING. ATTENTION SHOULD BE PAID TO ADDITIONAL SEASONAL MAINTENANCE NEEDS AS WELL AS THE FIRST GROWING SEASON.

- DURING CONSTRUCTION, THE PARTY RESPONSIBLE FOR IMPLEMENTING THE TEMPORARY (DURING CONSTRUCTION) STORMWATER MANAGEMENT FACILITIES MAINTENANCE PROGRAM WILL BE THE CONTRACTOR. THE NAME AND CONTACT INFORMATION WILL BE FILED WITH THE TOWN OF YORKTOWN AND THE NYSDEC AT THE TIME OF THE PRE-CONSTRUCTION MEETING. THE PERMANENT MAINTENANCE PROGRAM FOR ALL NEW STORMWATER MANAGEMENT FACILITIES WILL BE MANAGED BY THE INDIVIDUAL HOMEOWNERS UPON COMPLETION OF CONSTRUCTION AND ACCEPTANCE OF THE IMPROVEMENTS.

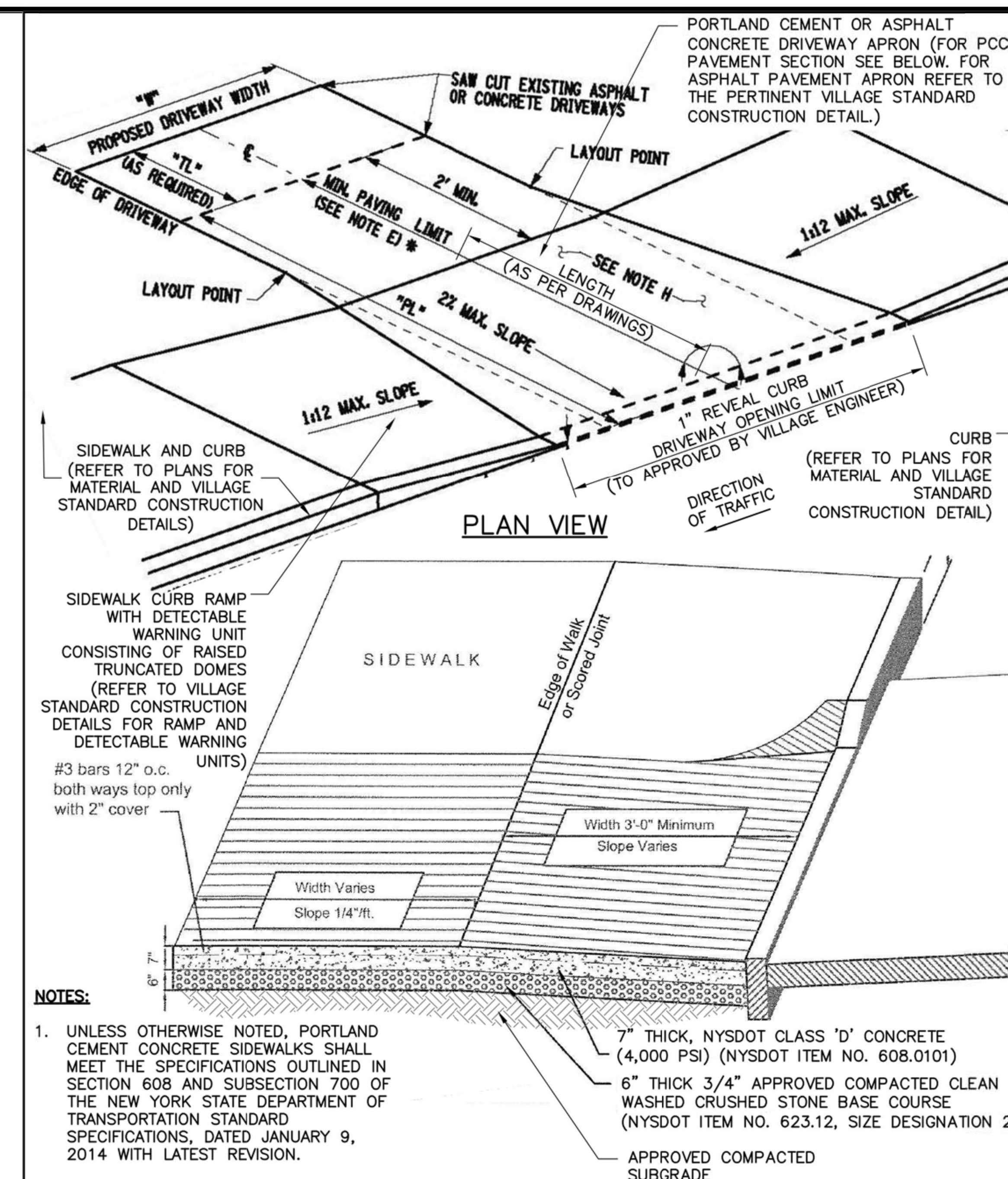

NOTES:

1. UNLESS OTHERWISE NOTED, PORTLAND CEMENT CONCRETE SIDEWALKS SHALL MEET THE SPECIFICATIONS OUTLINED IN SECTION 608 AND SUBSECTION 700 OF THE NEW YORK STATE DEPARTMENT OF TRANSPORTATION STANDARD SPECIFICATIONS, DATED JANUARY 9, 2014 WITH LATEST REVISION.
2. CONVENTIONALLY FORMED CONCRETE SHALL MEET THE REQUIREMENTS FOR CLASS D IN ACCORDANCE WITH SECTION 501 "PORTLAND CEMENT CONCRETE--GENERAL."

REINFORCED CONCRETE DRIVEWAY

TYPICAL SECTION

VILLAGE OF MAMARONECK STANDARD CONSTRUCTION DETAILS PREPARED IN THE OFFICE OF THE VILLAGE ENGINEER	PORTLAND CEMENT CONCRETE TAPERED DRIVEWAY APRON (SIDEWALK ABUTTING ROADWAY) DESIGNED BY: ARC, PE / CHECKED BY: ARC, PE DRAWN BY: ARC, PE / VOM PCC Driveway.dwg	VILLAGE OF MAMARONECK VILLAGE MUNICIPAL BUILDING 169 MT. PLEASANT AVENUE (3RD FLOOR) WESTCHESTER COUNTY VILLAGE OF MAMARONECK, NY 10543 PHONE: (914) 777-7731 FAX: (914) 777-7792	PROJECT: DETAILS SCALE: NOT TO SCALE DATE: 03/13/2014 SD-5E

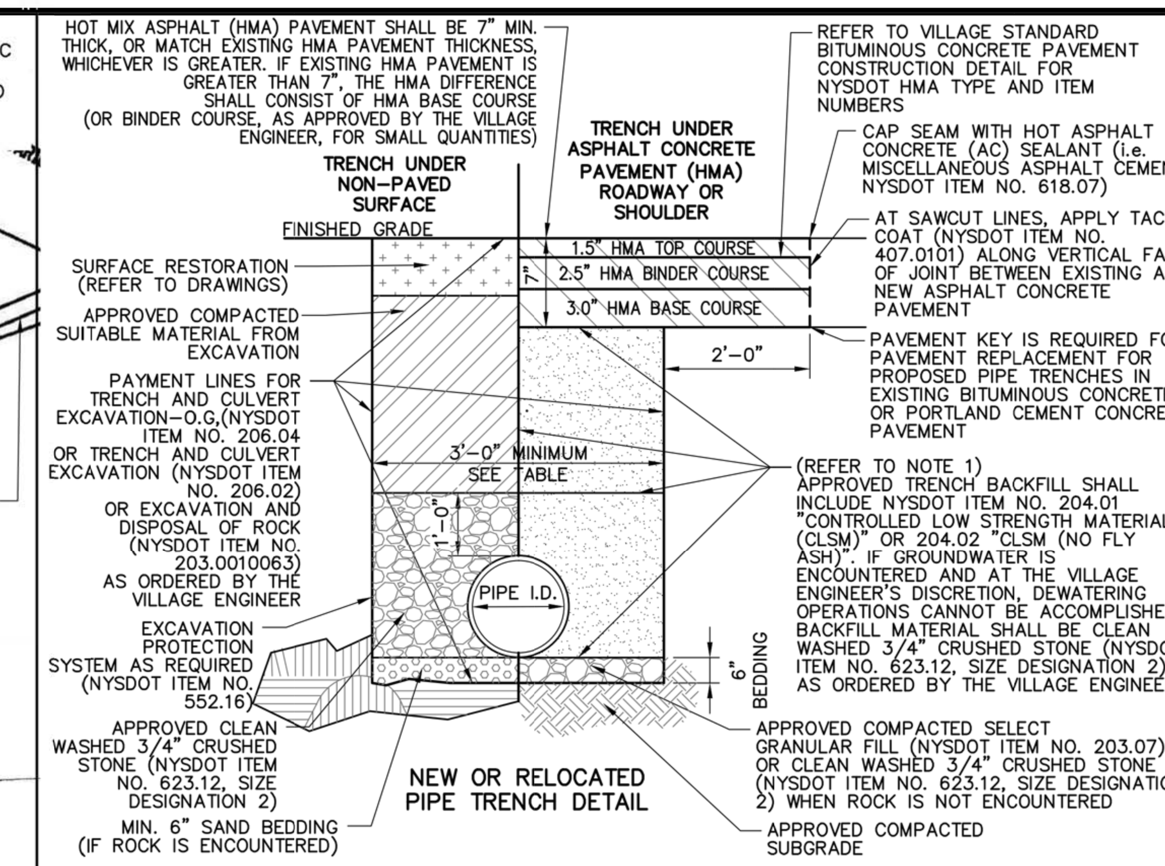

NEW OR RELOCATED PIPE TRENCH DETAIL

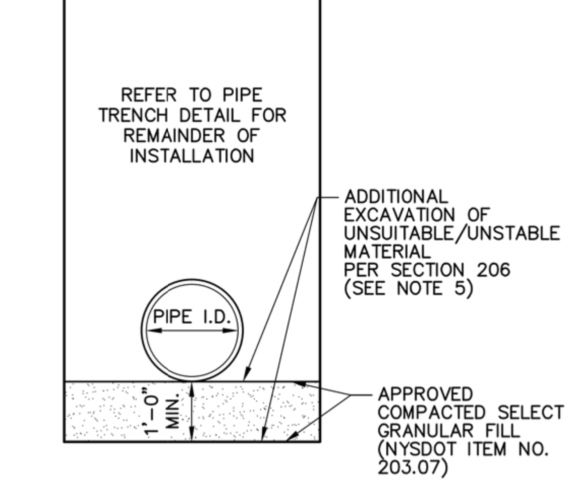

PIPE INSTALLATION IN UNSTABLE OR UNSUITABLE SOIL CONDITIONS

EXCAVATION PAYMENT WIDTHS	
PIPE INSIDE DIAMETER (I.D.)	TRENCH WIDTH
3	3'-0"
4	3'-0"
6	3'-0"
8	3'-0"
10	3'-0"
12	3'-0"
14	3'-6"
16	3'-6"
18	3'-6"
20	4'-0"
24	4'-0"
30	4'-6"
36	5'-0"
42	5'-6"
48	6'-0"
54	6'-6"
60	7'-0"
64	7'-6"

VILLAGE OF MAMARONECK STANDARD CONSTRUCTION DETAILS PREPARED IN THE OFFICE OF THE VILLAGE ENGINEER	PIPE TRENCH AND ASPHALT CONCRETE PAVEMENT RESTORATION DESIGNED BY: ARC, PE / CHECKED BY: ARC, PE DRAWN BY: ARC, PE / VOM Pipe Trench and Asphalt Re	VILLAGE OF MAMARONECK VILLAGE MUNICIPAL BUILDING 169 MT. PLEASANT AVENUE (3RD FLOOR) WESTCHESTER COUNTY VILLAGE OF MAMARONECK, NY 10543 PHONE: (914) 777-7731 FAX: (914) 777-7792	PROJECT: DETAILS SCALE: NOT TO SCALE DATE: 03/13/2014 REV: 10/16/2014 SD-2A

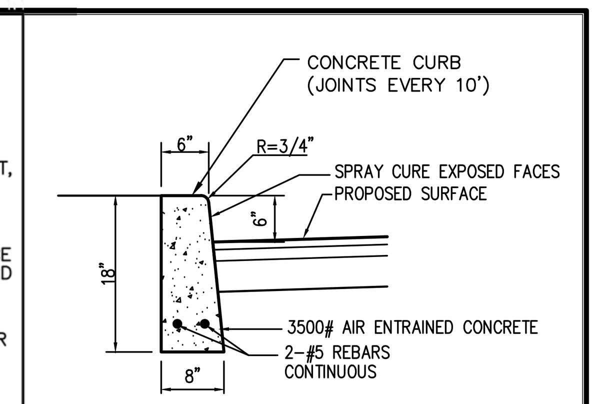

NOTE:
EXPANSION JOINTS TO BE INSTALLED EVERY 10 FEET.

CONCRETE CURB (ON-SITE)

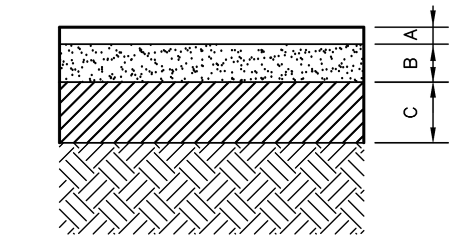

A– 2" TOP COURSE– N.Y.S.D.O.T. ITEM, 403.178202, TYPE 6 F2
B– 4" BINDER COURSE N.Y.S.D.O.T. ITEM, 403.13, TYPE 3
C– 6" SUBBASE COURSE– N.Y.S.D.O.T. ITEM, 304.12, TYPE 2

PAVEMENT SECTION (ON-SITE)

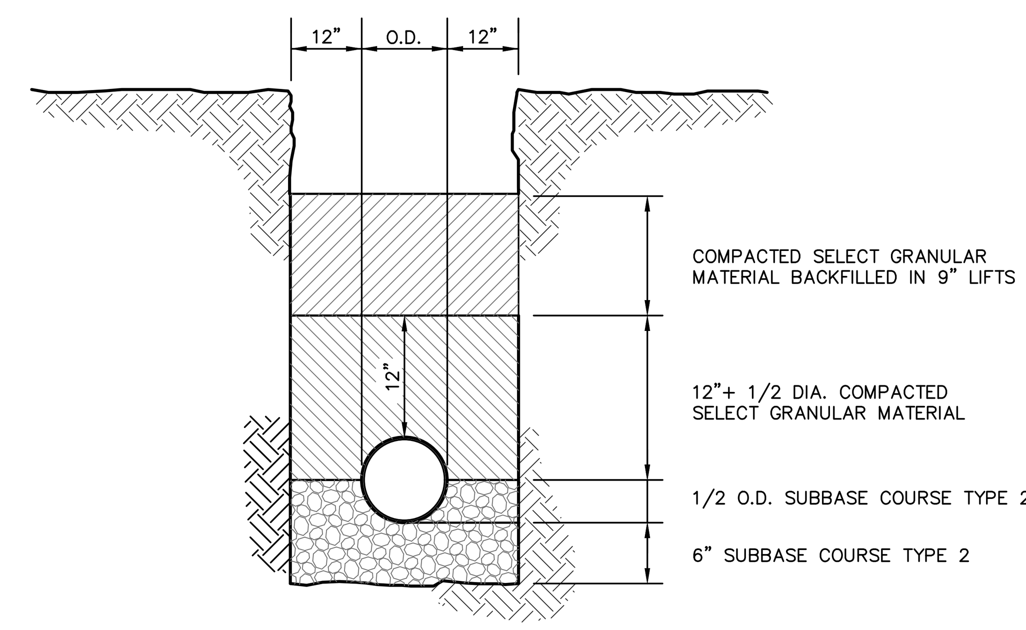

TRENCH BEDDING (ON-SITE)

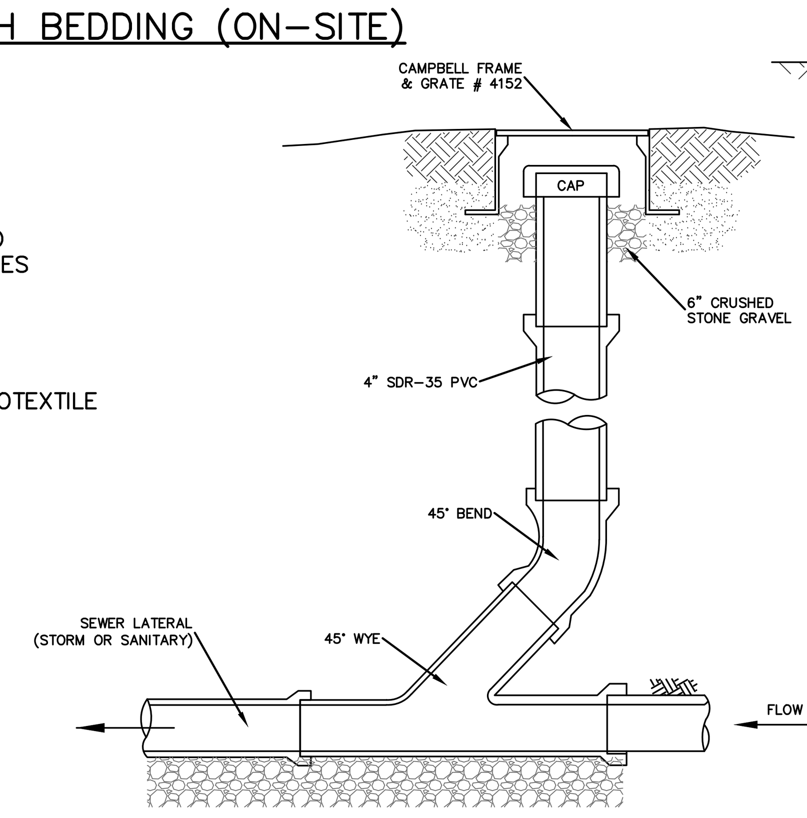

SEWER CLEANOUT DETAIL (GRAVITY)

(STORM OR SANITARY)

NOTES (SANITARY SEWER SERVICES):
1. ALL SANITARY SEWER SERVICES TO BE 4"ø SDR-35 @ 1.0% MINIMUM.
2. IN ACCORDANCE WITH THE NYS RESIDENTIAL BUILDING CODE, THE FOLLOWING REQUIREMENTS APPLY:
   A. CLEANOUTS SHALL BE INSTALLED NOT MORE THAN 100 FEET APART IN HORIZONTAL DRAINAGE LINES (P3005.2.2).
   B. CLEANOUTS SHALL BE INSTALLED AT EACH CHANGE OF DIRECTION OF THE DRAINAGE SYSTEM GREATER THAN 45 DEGREES.
   C. CLEANOUTS SHALL BE INSTALLED SO THAT THE CLEANOUT OPENS TO ALLOW CLEANING IN THE DIRECTION OF THE FLOW OF THE DRAINAGE LINE (P3005.2.8).

NOTES (STORM SEWER):
1. REFER TO PLAN FOR SPECIFIC PIPE SIZING AND SLOPE SPECIFICATIONS; HOWEVER, IN GENERAL, ALL STORM SEWER SERVICES TO BE 6"ø SDR-35 @ 1.0% MINIMUM.
2. CLEANOUTS SHALL BE PLACED BEFORE SIGNIFICANT PIPE BEND LOCATIONS (I.E., JUNCTIONS, 90-DEGREE BENDS, ETC.) UNLESS A ROOF LEADER DOWNSPOUT CONNECTION IS PROPOSED.

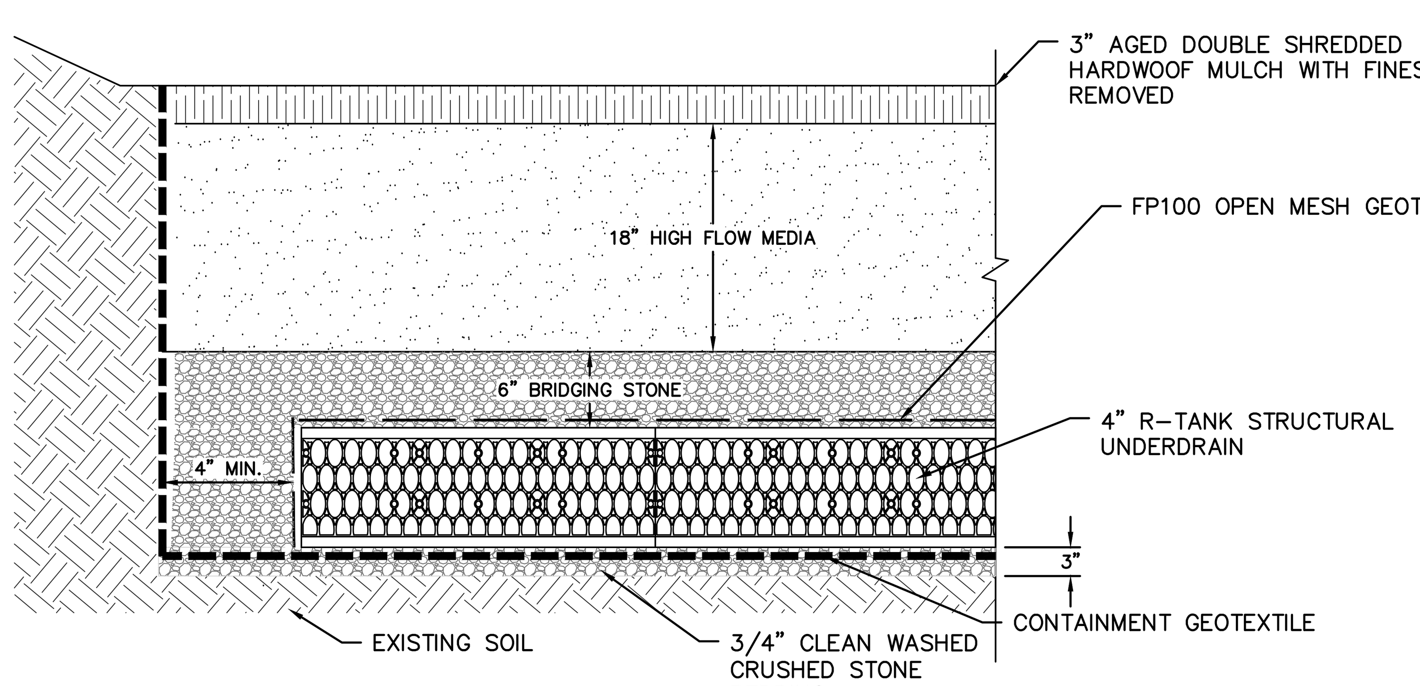

FOCALPOINT FILTER

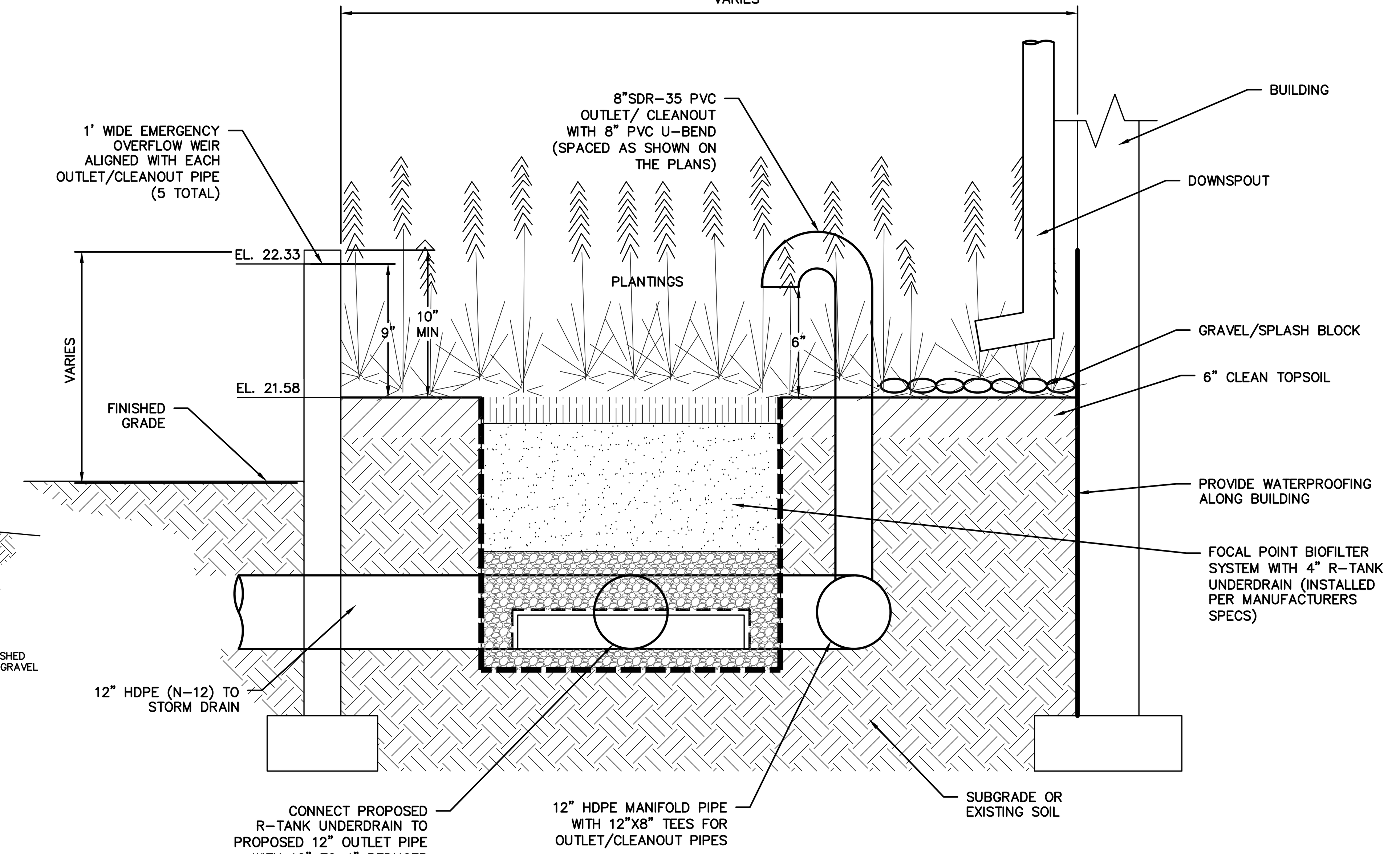

STORMWATER PLANTER WITH FOCAL POINT FILTER SYSTEM

No.	Description	Date
1.	REVISED PER TOWN COMMENTS	9-27-18

Revisions

THIS PLAN NOT VALID FOR CONSTRUCTION WITHOUT ENGINEERS SEAL & SIGNATURE

PROJECT:

SELF STORAGE BUILDING ADDITION
560 FENIMORE ROAD
VILLAGE OF MAMARONECK
WESTCHESTER COUNTY – NEW YORK

SITE DETAILS

HEC
HUDSON ENGINEERING & CONSULTING, P.C.
45 Knollwood Road - Suite 201
Elmsford, New York 10523
T: 914-909-0420
F: 914-560-2086

© 2018

STATE OF NEW YORK – MICHAEL F. STEIN – No. 80637 – LICENSED PROFESSIONAL ENGINEER

Date:	2/8/18
Scale:	1" = 20'
Designed By:	D.C.
Checked By:	M.S.
Sheet:	7 / 7
Sheet No.	C-7